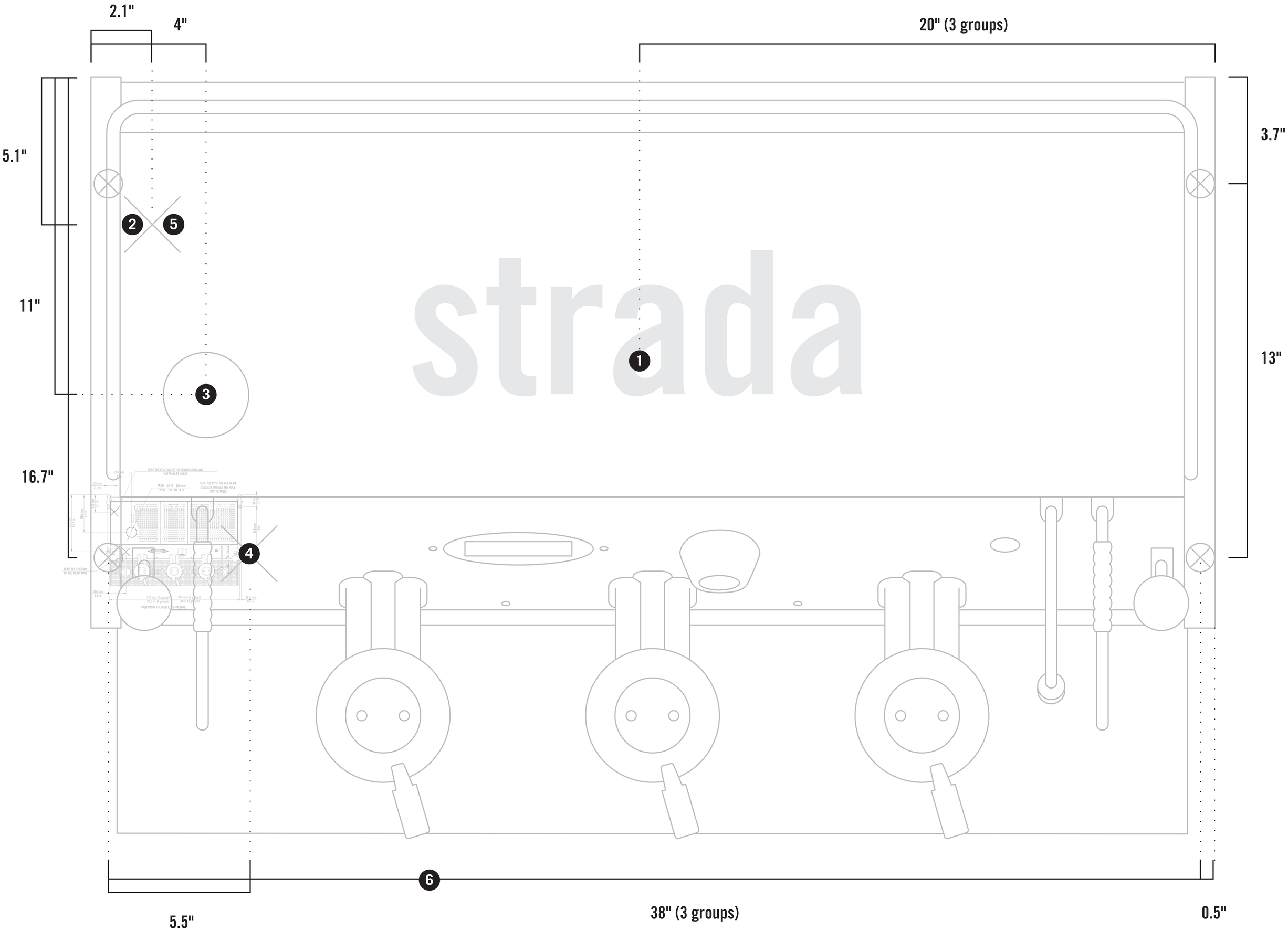
2.1"
4"
20" (3 groups)
5.1"
3.7"
11"
13"
16.7"
strada
1
2
3
4
5
6
5.5"
38" (3 groups)
0.5"

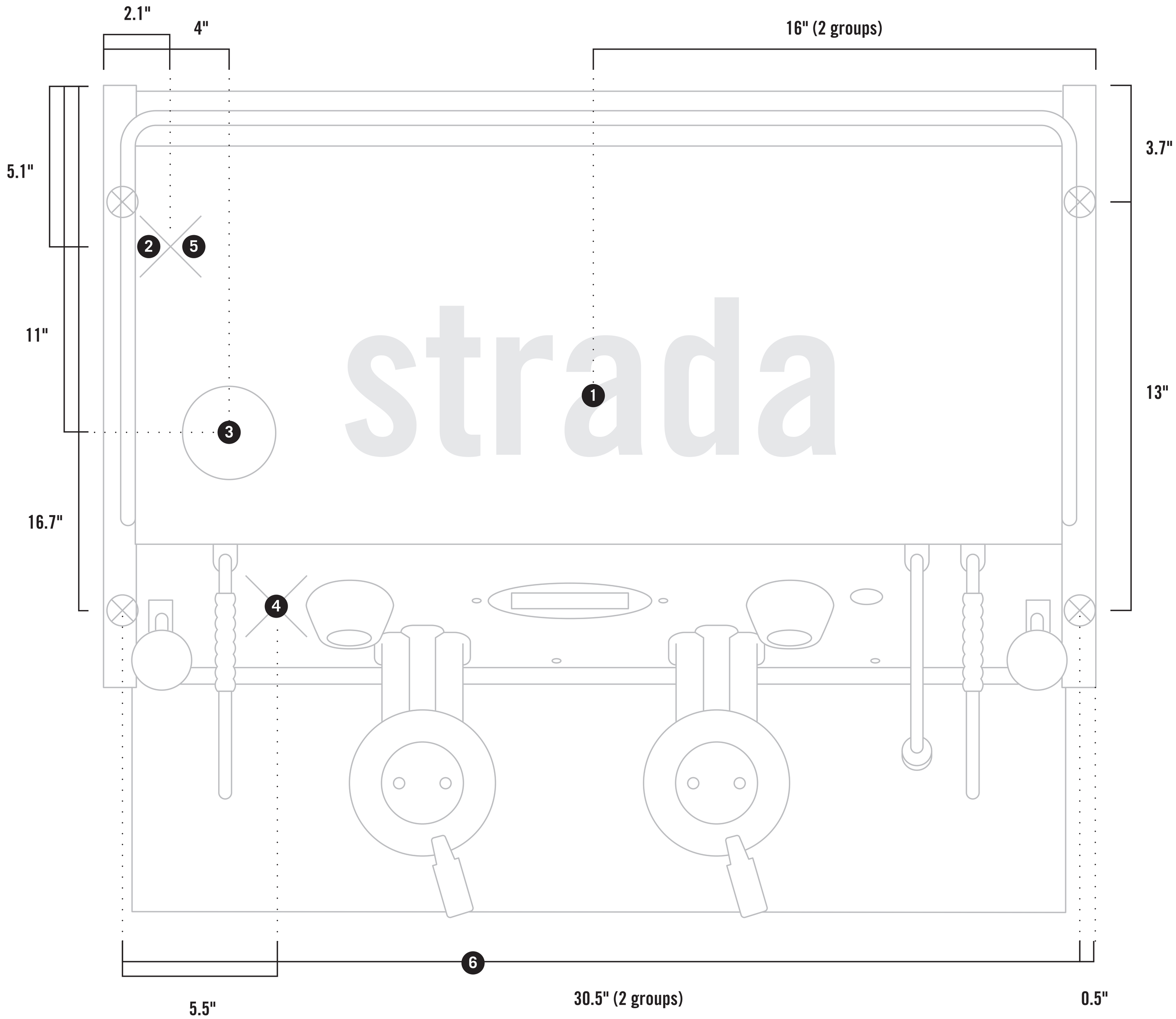
2.1"
4"
16" (2 groups)
5.1"
3.7"
11"
13"
16.7"
strada
1
2
3
4
5
6
5.5"
30.5" (2 groups)
0.5"