parts catalog

strada x

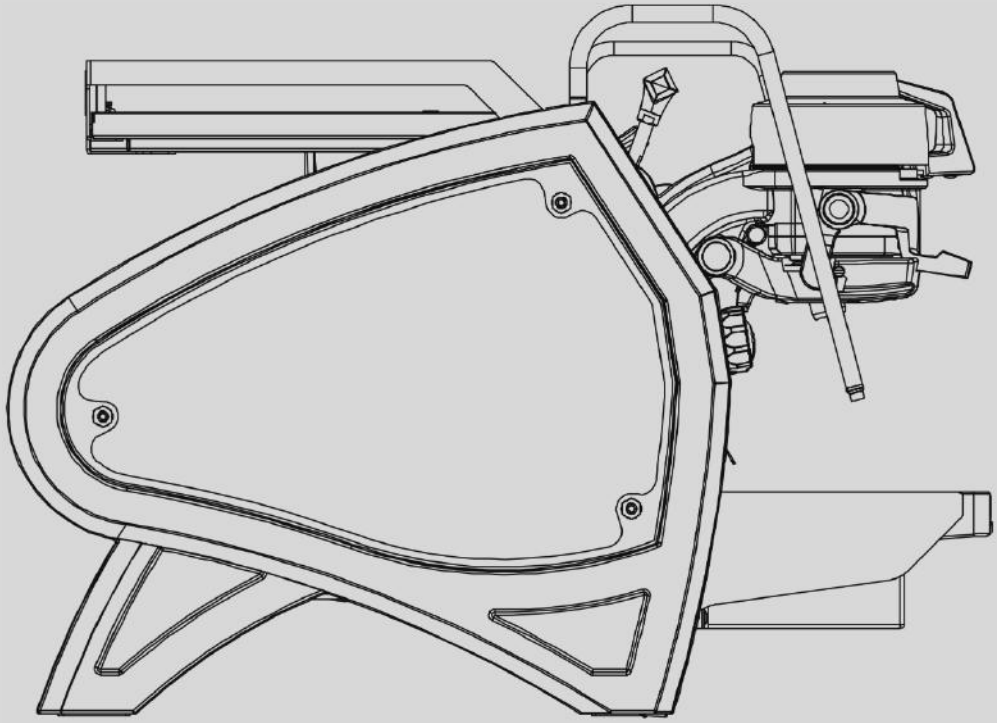

la marzocco

handmade in florence

V 1.0

Please consider the environment before printing

la marzocco
handmade in florence

INDEX

	Pag.	Ver.
Specifications	4	1.0
Body Panel Assembly	6	1.0
Electrical System	12	1.0
Control Panel Assembly	14	1.0
Steam and Hot Water Assembly	16	1.0
Steam Valve Assembly	18	1.0
Hydraulic Assembly	20	1.0
Fittings and Valves	29	1.0
Coffee Boiler	31	1.0
Gear Pump	41	1.0
Steam Boiler	45	1.0
Scales Version – Body Panel Assembly	48	1.0
Scales Version – Scales Assembly	50	1.0
Electrical System and Pump	54	1.0
Portafilter Assembly	56	1.0
Hoses and Accessories	61	1.0

la marzocco
handmade in florence

SPECIFICATIONS

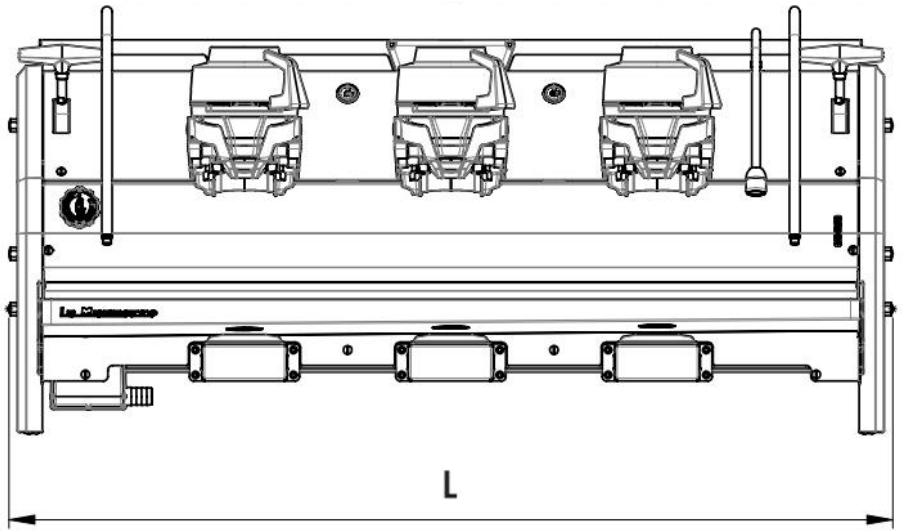

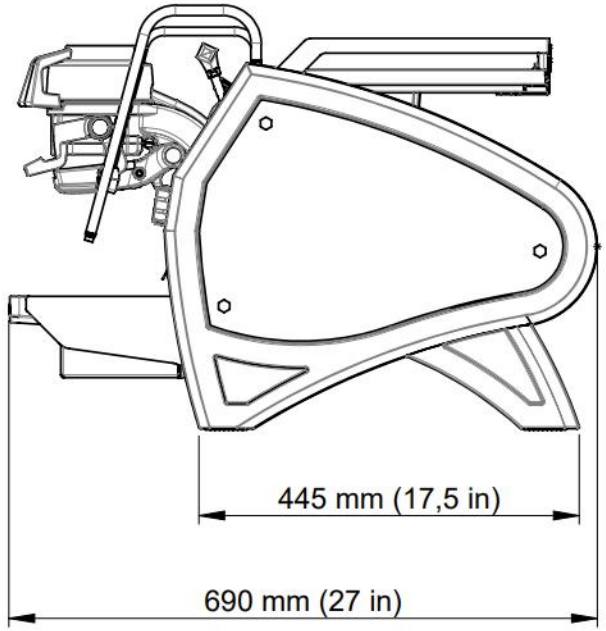

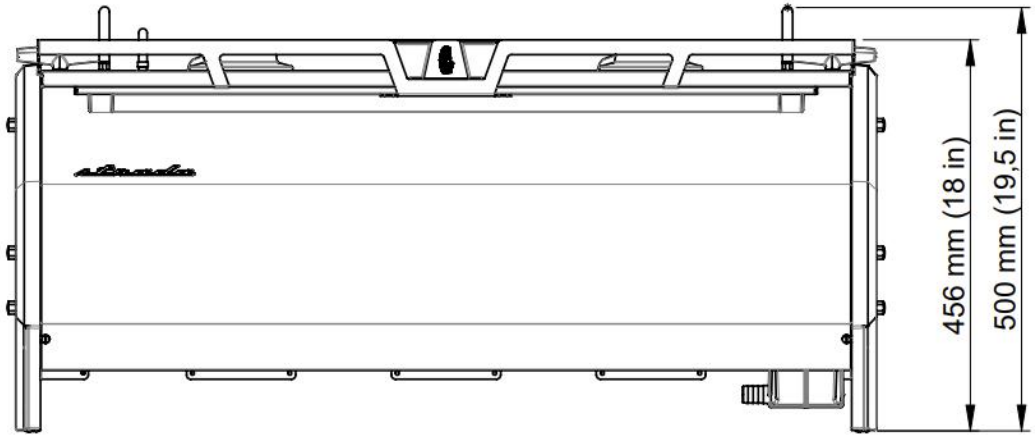

la marzocco
handmade in florence

SPECIFICATIONS

Group	1grp	2grp	3grp
Height (cm/in)	50 / 19.7	50 / 19.7	50 / 19.7
Width (cm/in)	53 / 20.9	83 / 32.7	103 / 40.6
Depth (cm/in)	69 / 27.2	69 / 27.2	69 / 27.2
Weight (kg/lbs)	66 / 145.2	94 / 206.8	101 / 222.2
Voltage (VAC)	220 single ph	220 single ph	220 single ph
Wattage (min)	2037	4800	6730
Wattage (max)	2220	5666	7783
Coffee Boiler Capacity (liters)	1.3	2.6	3.9
Steam Boiler Capacity (liters)	3.5	8.2	11.8

la marzocco
handmade in florence

BODY PANEL ASSEMBLY

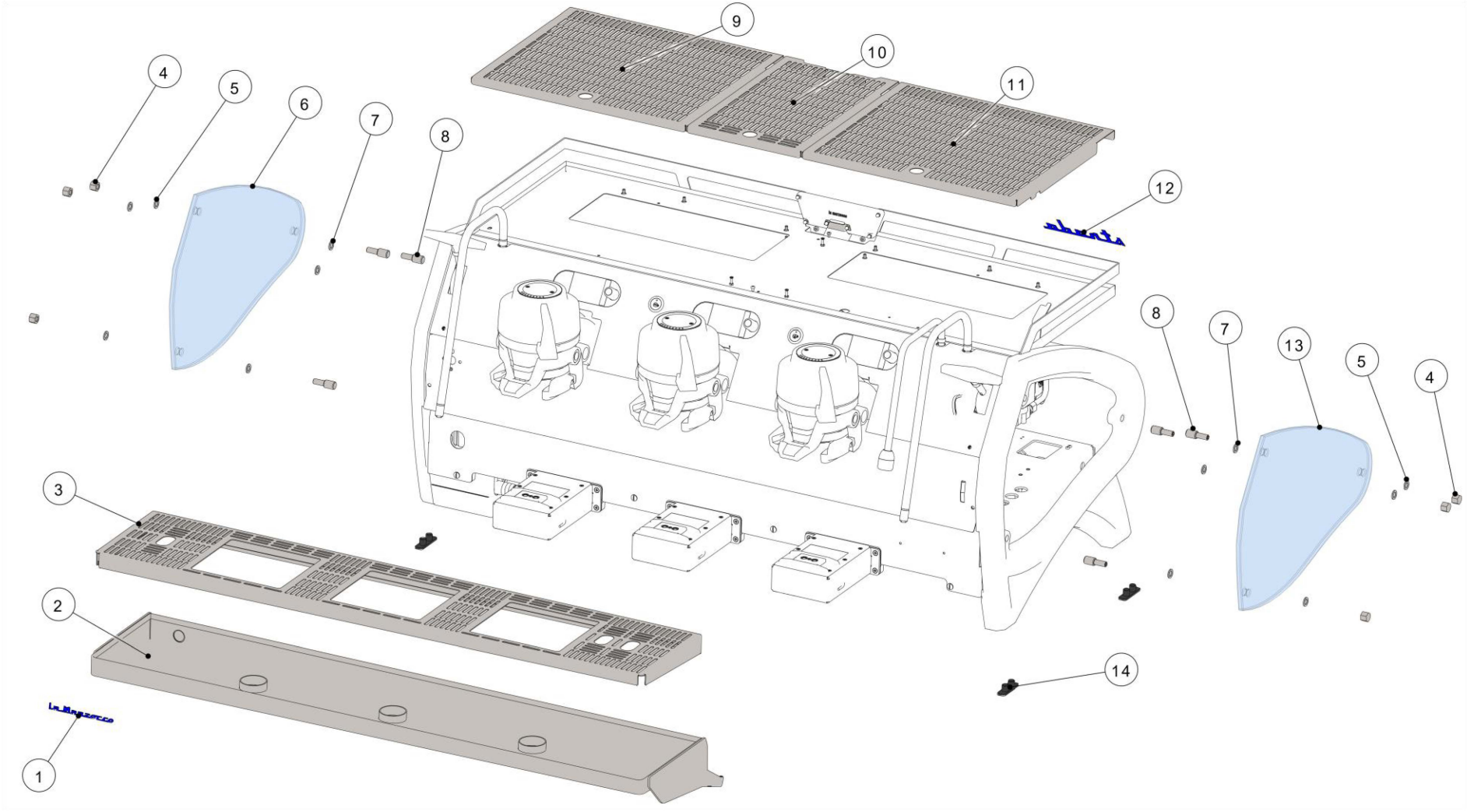

la marzocco
handmade in florence

BODY PANEL ASSEMBLY

Item	Part number	Description
0001	D.4.061	LOGO LA MARZOCCO STRADA X
0002	C.1.115.03	TRAY DRAIN STRADA 2GR
0002	C.1.089.03	TRAY DRAIN STRADA 3GR
0003	C.1.281.3	GRID DRAIN STRADA 3GR W/SCALES
0003	C.1.281.2	GRID DRAIN STRADA 2GR W/SCALES
0004	I.1.036	CAP NUT M8 H12 WR 13 S/S
0005	L1003	WASHER 8,5X14X1,5 S/S A2
0006	C.5.020.SX	GLASS LEFT STRADA X-S
0007	I.6.002	WASHER 8.1X14X1 PA TRASPARENT
0008	I.1.198	SOCKET GRUB SCREW M12 - M8 S/S
0009	C.1.697.3	CUP TRAY GRID LARGE STRADA X-S 3GR
0009	C.1.697.2.DX	CUP TRAY GRID LARGE RIGHT STRADA X-S 2GR
0009	C.1.697.2.SX	CUP TRAY GRID LARGE LEFT STRADA X-S 2GR
0010	C.1.696	CUP TRAY GRID SMALL STRADA X-S
0011	D.4.062	LOGO BACK PANEL STRADA X
0012	C.5.020.DX	GLASS RIGHT STRADA X-S
0013	F.2.061	RUBBER FOOT STRADA X-S

la marzocco
handmade in florence

BODY PANEL ASSEMBLY

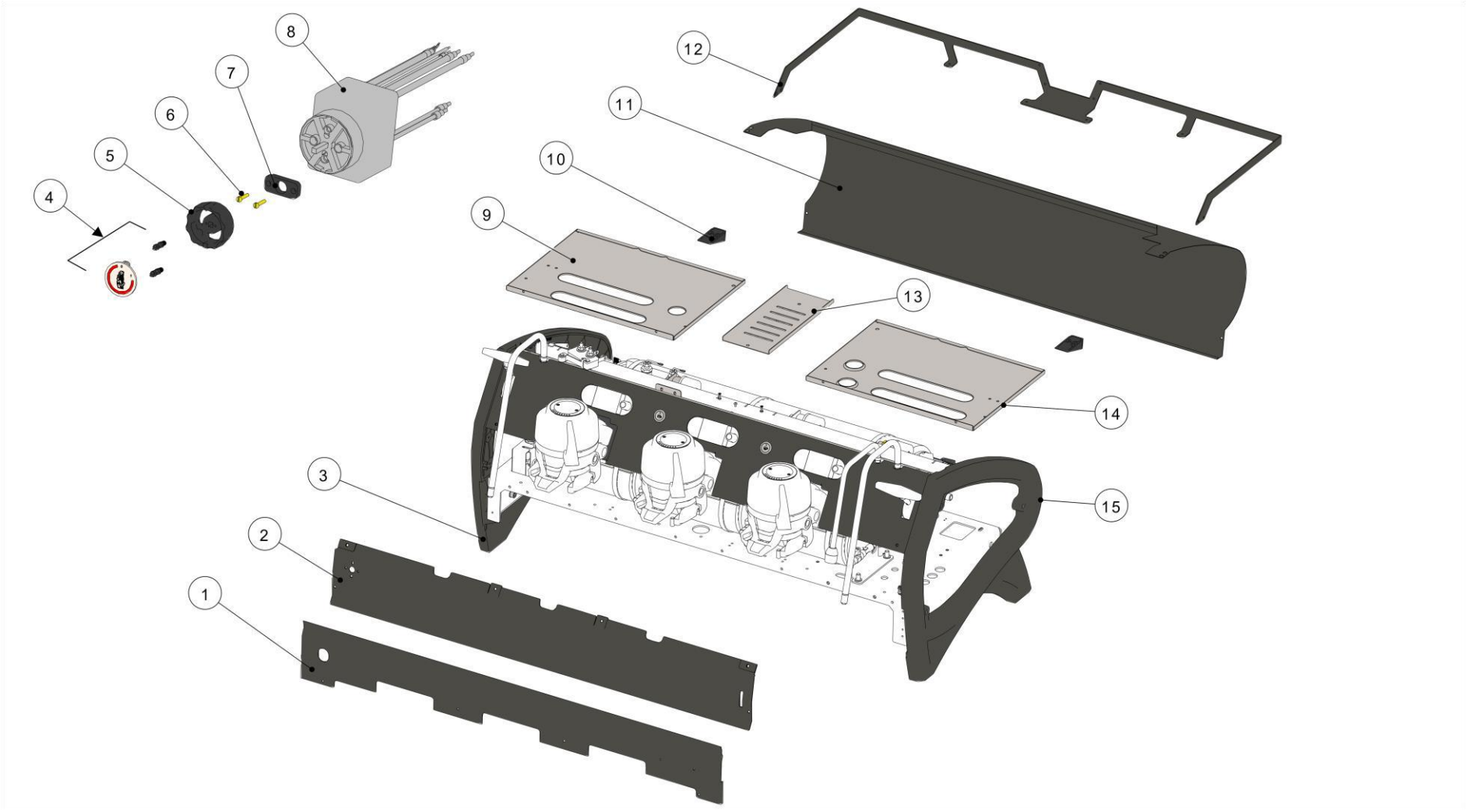

la marzocco
handmade in florence

BODY PANEL ASSEMBLY

Item	Part number	Description
0001	C.1.705.2	PANEL LOWER STRADA 2GR W/SCALES
0001	C.1.705.3	PANEL LOWER STRADA 3GR W/SCALES PAINTED
0002	C.1.703.2	PANEL MIDDLE FRONT STRADA S 2GR
0002	C.1.703.3	PANEL MIDDLE FRONT STRADA S 3GR
0003	C.3.032.SX.01	PANEL RIGHT SIDE STRADA X-S
0004	D.4.033.R	COVER SWITCH KB90 W/SPACERS
0005	F.1.139	HANDLE SWITCH KB90
0006	VITE3X16	SCREW M3X16 CHEESE BRASS
0007	F.1.130	SPACER SWITCH KB90
0008	E.2.128	POWER SUPPLY DELTA PJH-24V300WBCA
0008	E.2.125	TRIPOLAR SWITCH 42A W/WIRES STRADA X-S
0008	E.2.124	BIPOLAR SWITCH 42A W/WIRES STRADA X-S
0009	C.1.692.2.SX	HOLDER PANEL CUPW. LEFT STRADA X-S 2GR
0009	C.1.692.3.SX	HOLDER PANEL CUPW. LEFT STRADA X-S 3GR
0010	F.1.257	PLASTIC HOLDER CUPWARMER STRADA X-S
0011	C.1.690.2	PANEL BACK STRADA X-S 2GR
0011	C.1.690.3	PANEL BACK STRADA X-S 3GR
0012	C.1.707.2	PANEL LOWER FRONT STRADA 2GR PAINTED
0012	C.1.707.3	STRADA 3GR FRONT LOWER PANEL PAINTED
0013	C.1.709	COVER CABLES CUPW. STRADA X-S
0014	C.1.692.2.DX	HOLDER PANEL CUPW. RIGHT STRADA X-S 2GR
0014	C.1.692.3.DX	HOLDER PANEL CUPW. RIGHT STRADA X-S 3GR
0015	C.3.032.DX.01	PANEL LEFT SIDE STRADA X-S

la marzocco
handmade in florence

BODY PANEL ASSEMBLY

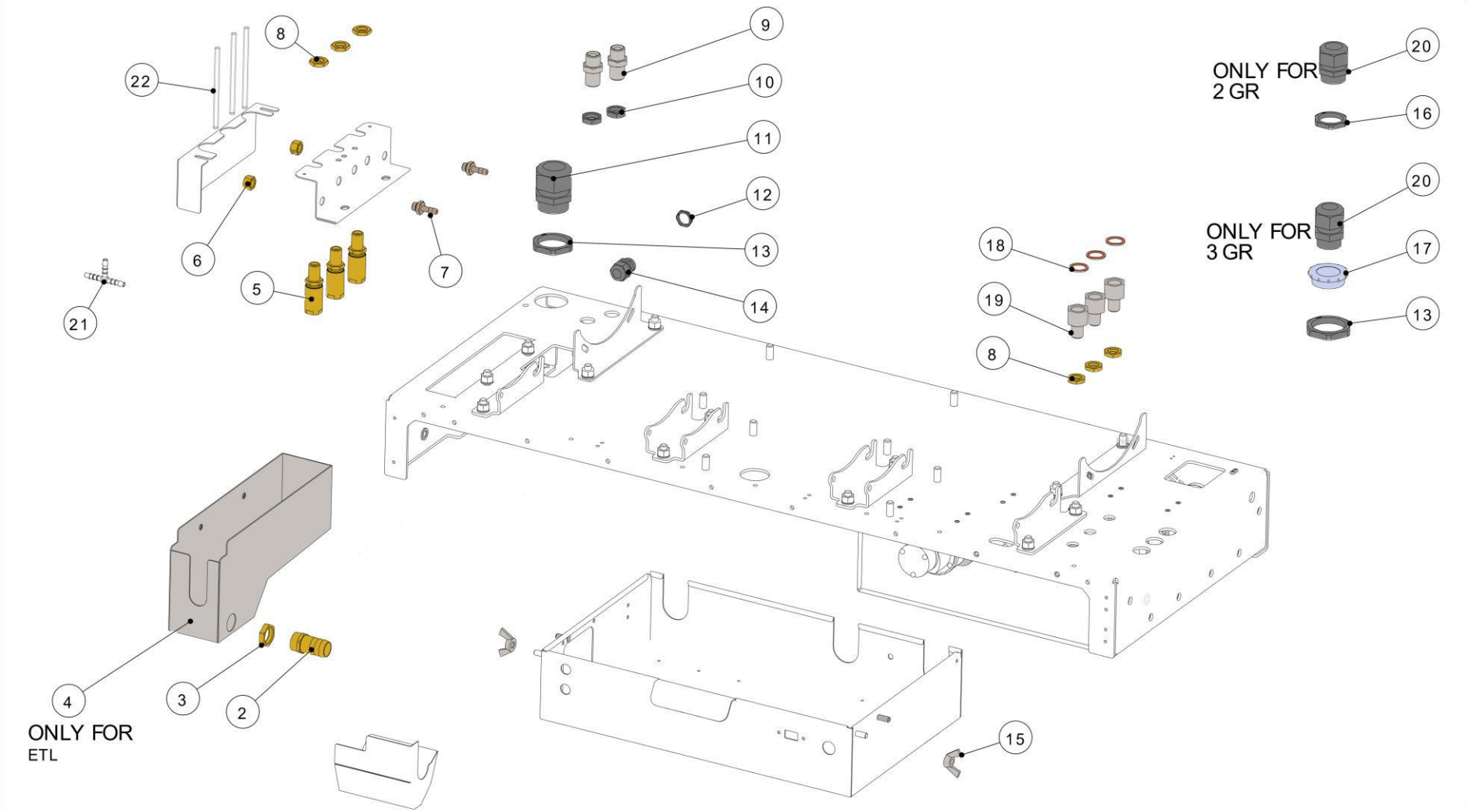

la marzocco
handmade in florence

BODY PANEL ASSEMBLY

Item	Part number	Description
0002	L037/2PGR	HOSE FITTING G1/2 WR22 D20 Di16 BRASS
0003	L037/D	NUT G1/2 H6 WR24 BRASS
0004	C.1.723	DRAIN BOX NSF STRADA X/S
0005	L140_C	COMPLETE EXPANSION VALVE
0006	A.1.020	DRAIN SPOUT G1/8F H9 WR14 BRASS
0007	L292	GS/3 TUBE FITTING
0008	L146	NUT G1/4 H4,5 WR19 BRASS
0009	A.5.020	NIPPLE G3/8M-G3/8M WR21 H38 S/S
0010	L183/1.01	NUT G3/8 H6 WR21 BRASS TREATED
0011	E.4.130	CORD GRIPS PG29 W/NUT
0012	I.6.010	NUT CORD GRIPS PG13,5 BLACK
0013	I.6.008	NUT CORD GRIPS PG29
0014	L322/P	CORD GRIPS PG13,5
0015	I.1.003	WING NUT M6 H5 S/S A2
0016	I.6.009	NUT CORD GRIPS PG21 BLACK
0017	F.1.097	REDUCER CORD GRIPS PG29
0018	L180/1	WASHER 22X17X1,5 COPPER
0019	A.5.021	FITTING G1/4M-G3/8F WR22 S/S
0020	L322/G	CORD GRIPS PG21
0021	A.7.001.01	HOSE CONNECTOR TEE-SHAPE D6,3 Di4 PVDF
0022	T.3.006	PTFE TUBE 6x4mm

la marzocco
handmade in florence

ELECTRICAL SYSTEM

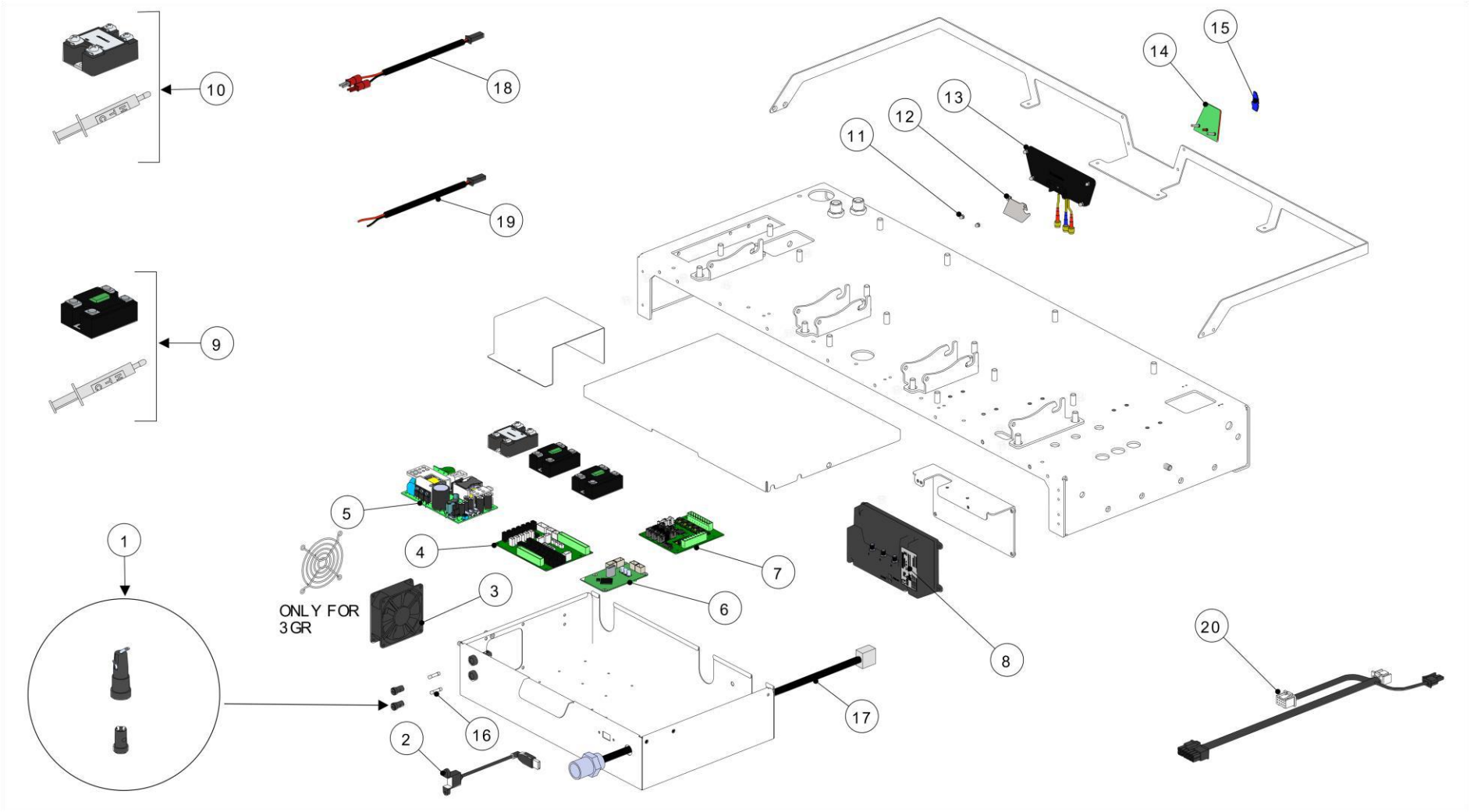

la marzocco
handmade in florence

ELECTRICAL SYSTEM

Item	Part number	Description
0001	E.2.004	UL FUSE HOLDER
0002	E.2.040	USB CABLE LINEA PB / STRADA EP
0003	E.2.025.01	FAN 24V 80X80mm PELKO
0004	E.1.061	UNIVERSAL BOARD 24V
0005	E.2.107.01	POWER SUPPLY 24V 130W LAUMA
0006	E.1.041.02	CORTEX BOARD
0007	E.1.060	BUTTON BOARD
0008	E.8.006.02	INTERNAL BOX GATEWAY IOT
0009	E.4.177.R	SSR DUAL 25A 240V W/THERMAL COMPOUND
0009	E.4.197.R	SSR DUAL 50A 600V W/THERMAL COMPOUND
0010	E.4.010.01.R	SSR 25A 240V W/THERMAL COMPOUND
0011	I.1.108	CAP NUT M3 H6,5 CH5,5 S/S
0012	C.1.701	COVER ANTENNA CABLE STRADA X-S
0013	1024	WiFi / BLUETOOTH ANTENNA
0014	C.1.702	CENTRAL BRACKET RAIL STRADA X-S VER.
0015	D.4.064	LOGO LION ADHESIVE STRADA X
0016	E.2.073	FUSE 3,15 A TIME-DELAY
0017	E.4.123	CABLE LOW T. C.A. W/CONN. IP67 FEMALE
0018	E.4.365	PUMP RELE CONTROL CABLE 110MM
0019	E.4.364	CUP W.+PUMP RELE CONTROL CABLES 130MM
0020	E.4.298	GATEWAY CONNECTION WIRING 1250MM

la marzocco
handmade in florence

CONTROL PANEL ASSEMBLY

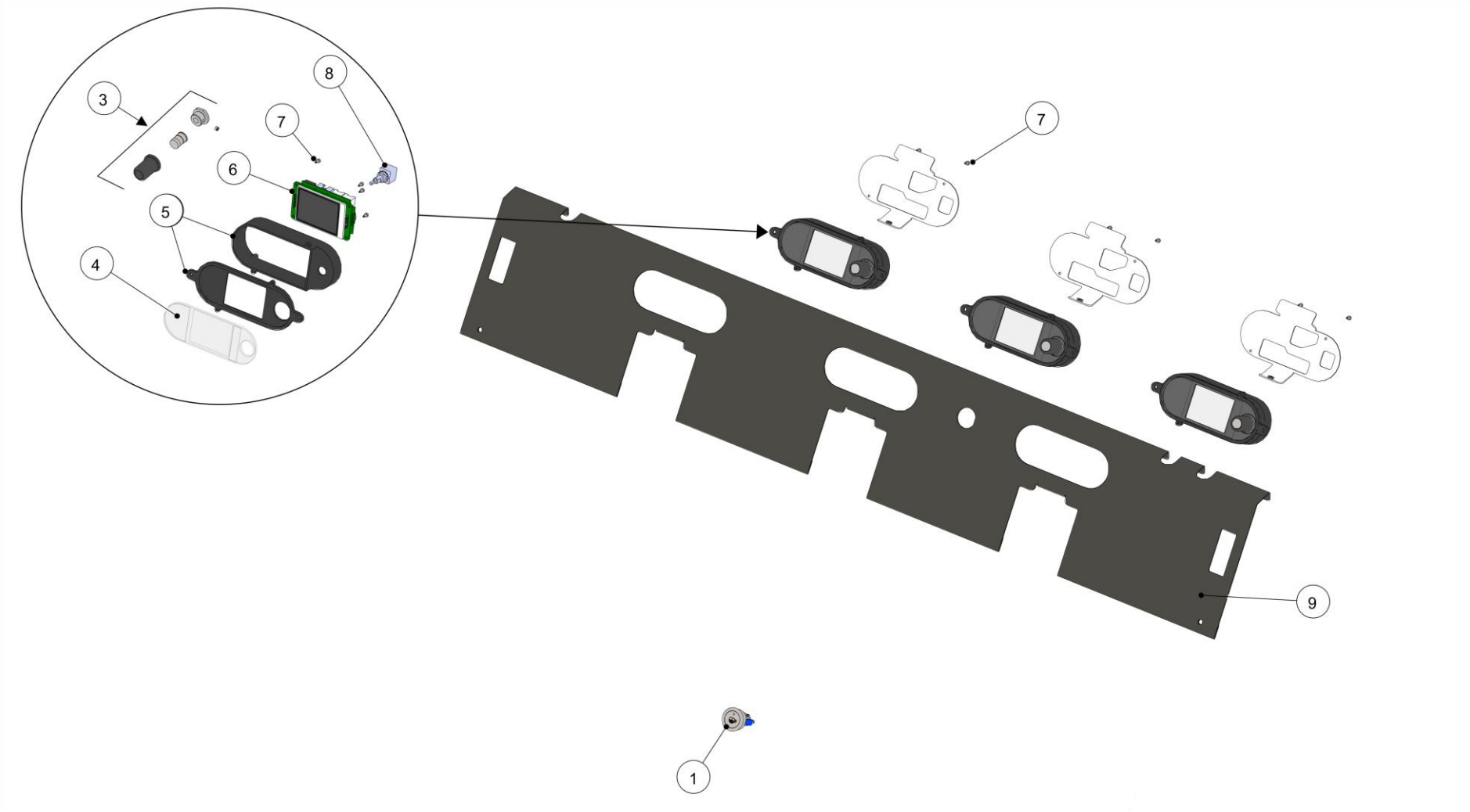

la marzocco
handmade in florence

CONTROL PANEL ASSEMBLY

Item	Part number	Description
0001	E.2.051.R	SWITCH HOT WATER W/WHITE LED WITH RISER
0003	1011	KIT BUTTON ENCODER
0004	F.1.286	GLASS DISPLAY FLAT STRADA X
0005	F.1.279	BOX DISPLAY + DISPLAY GLASS SEAT
0006	E.1.042.01	DISPLAY GRAPHIC W/ 2 BOARDS
0007	I.1.086	SELFTAP.SCREW 2,2X6,5 PHIL.ROUND-PAN S/S
0008	E.2.062	ENCODER LEVA
0009	C.1.740.2	PANN. FRONT. SUP. STRADA X 2GR
0009	C.1.740.3	PANN. FRONT. SUP. STRADA X 3GR

la marzocco
handmade in florence

STEAM AND HOT WATER ASSEMBLY

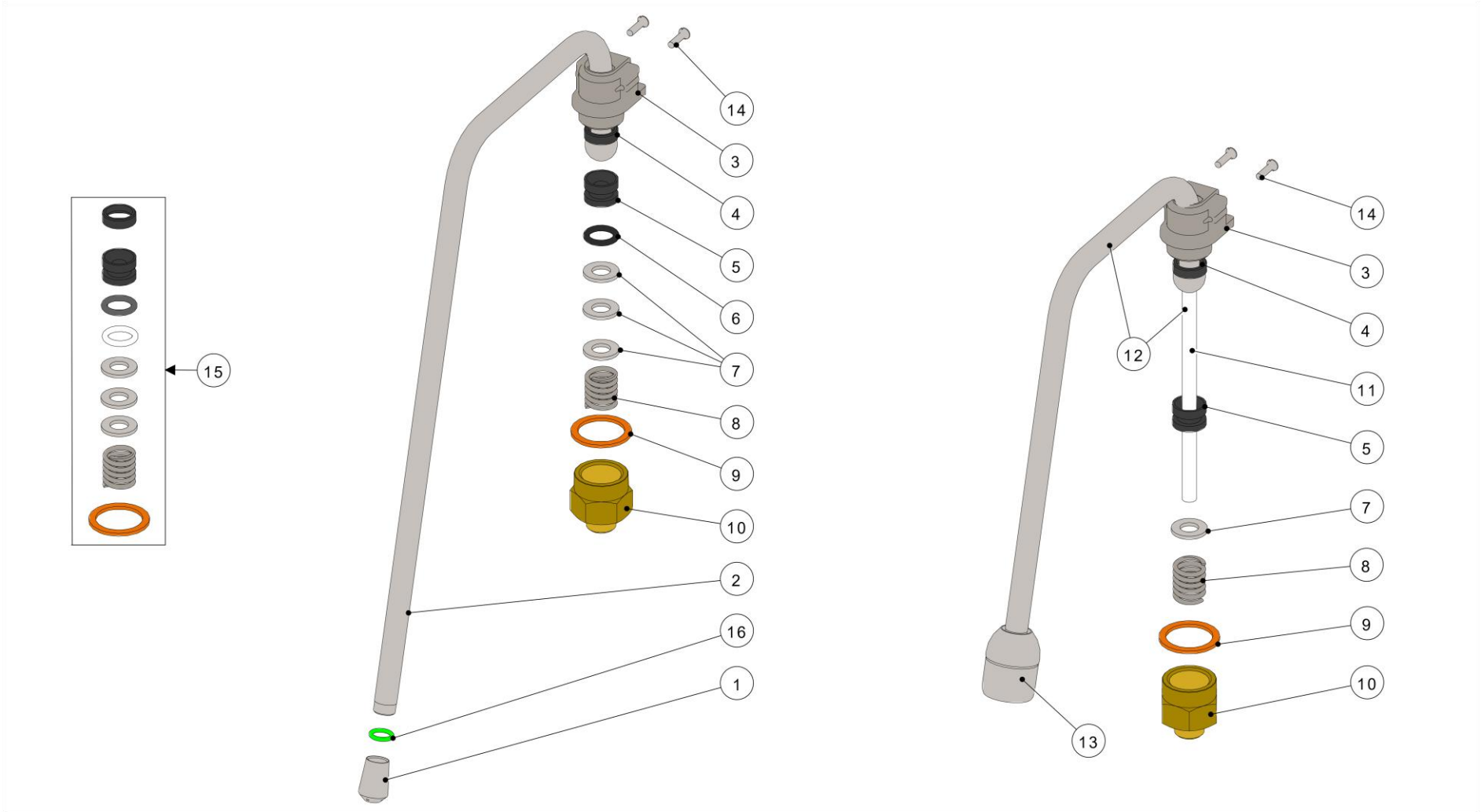

la marzocco
handmade in florence

STEAM AND HOT WATER ASSEMBLY

Item	Part number	Description
0001	A.5.050	STEAM TIP PRO TOUCH D1,5
0002	T.2.005	STEAM WAND PRO TOUCH TREATED
0003	A.5.006.01	STRADA STEAM WAND HOLDER, S/S
0004	F.1.029	STEAM WAND BUSHING
0005	H.2.003	PTFE STEAM WAND SEAL
0006	H.1.004	O-RING 2,62X10,77 EPDM 70 ShA
0007	L1003	WASHER 8,5X14X1,5 S/S A2
0008	F.3.156	SPRING COMPRES. WD 2,5 OD 15,5 L 18 S/S
0009	L260/1A	WASHER 21X27X1,5 COPPER
0010	F.4.007.01	FITTING G1/4M - M20F H31 TR.
0011	T.3.001	PTFE TUBE 1/8-1/4
0012	T.2.121.R	HOT WATER WAND S/S STRADA W/PTFE
0013	L160/3.02	HOT WATER SPOUT G1/8 TREATED
0014	I.1.045	SCREW M3X12 PHILLIPS COUNTERSUNK S/S A2
0015	SA210.K	REBUILD KIT STEAM /HOT WATER WAND STRADA
0016	H.1.027	O-RING 1,78x7,65 VITON 70 ShA

la marzocco
handmade in florence

STEAM VALVE ASSEMBLY

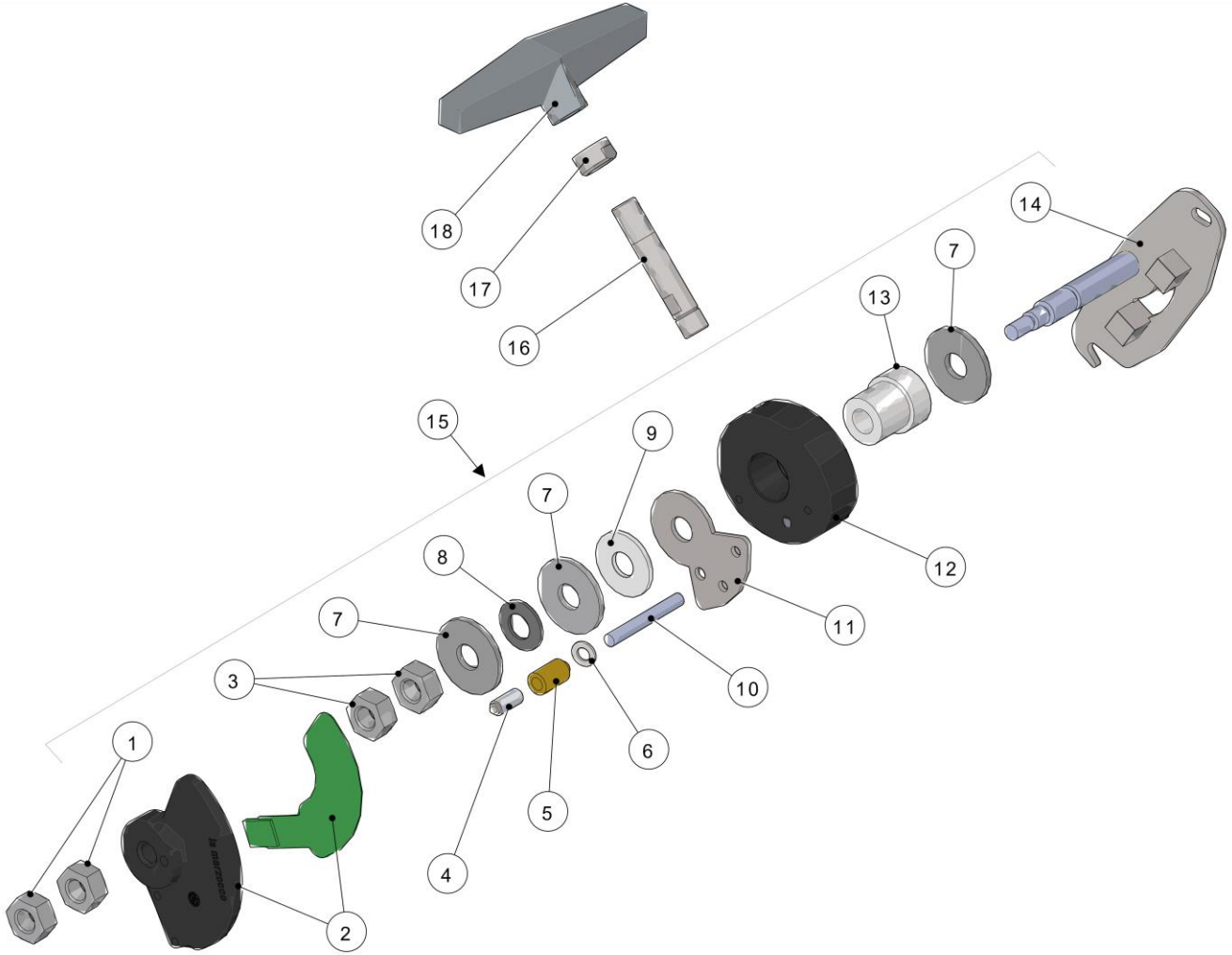

la marzocco
handmade in florence

STEAM VALVE ASSEMBLY

Item	Part number	Description
0001	DADO6M	NUT M6 H5 WR10 ZINC PLATED
0002	E.2.033.01.R	POTENTIOMETER+SUPPORT ASSEMBLY STRADA XS
0003	I.1.034	NUT M10 H7,8 WR17 S/S A2
0004	E.2.033.SC	WIPER X POTENZIOMETRO 2 - 6 N
0005	A.1.023	WIPER SUPPORT
0006	I.1.039	WASHER 5,4X10X1 S/S A2
0007	I.1.033	WASHER 10.7X30X1.8 S/S A2
0008	I.5.003	BELLEVILLE SPRING 10X20X1,3
0009	F.1.032	WASHER 10X30X2 PTFE
0010	I.1.037	S/S STUD FOR STEAM VALVE CAM
0011	I.1.050	SHAPED WASHER. WIPER STRADA EP
0012	F.1.027	CAM STEAM LEVER STRADA
0013	F.4.011.01	CAM BUSHING PTFE STRADA STEAM
0014	C.1.683	STRADA STEAM LEVER BRACKET X-S
0015	SA550.SX	STEAM ASSEMBLY LEFT SIDE STRADA X-S
0015	SA550.DX	STEAM ASSEMBLY RIGHT SIDE STRADA X-S
0016	A.5.012	LEVER STEAM VALVE STRADA
0017	I.1.199	CONTRODADO MANOPOLA VAPORE STRADA X-S
0018	F.8.019	STEAM LEVER KNOB STRADA X-S

la marzocco
handmade in florence

HYDRAULIC ASSEMBLY

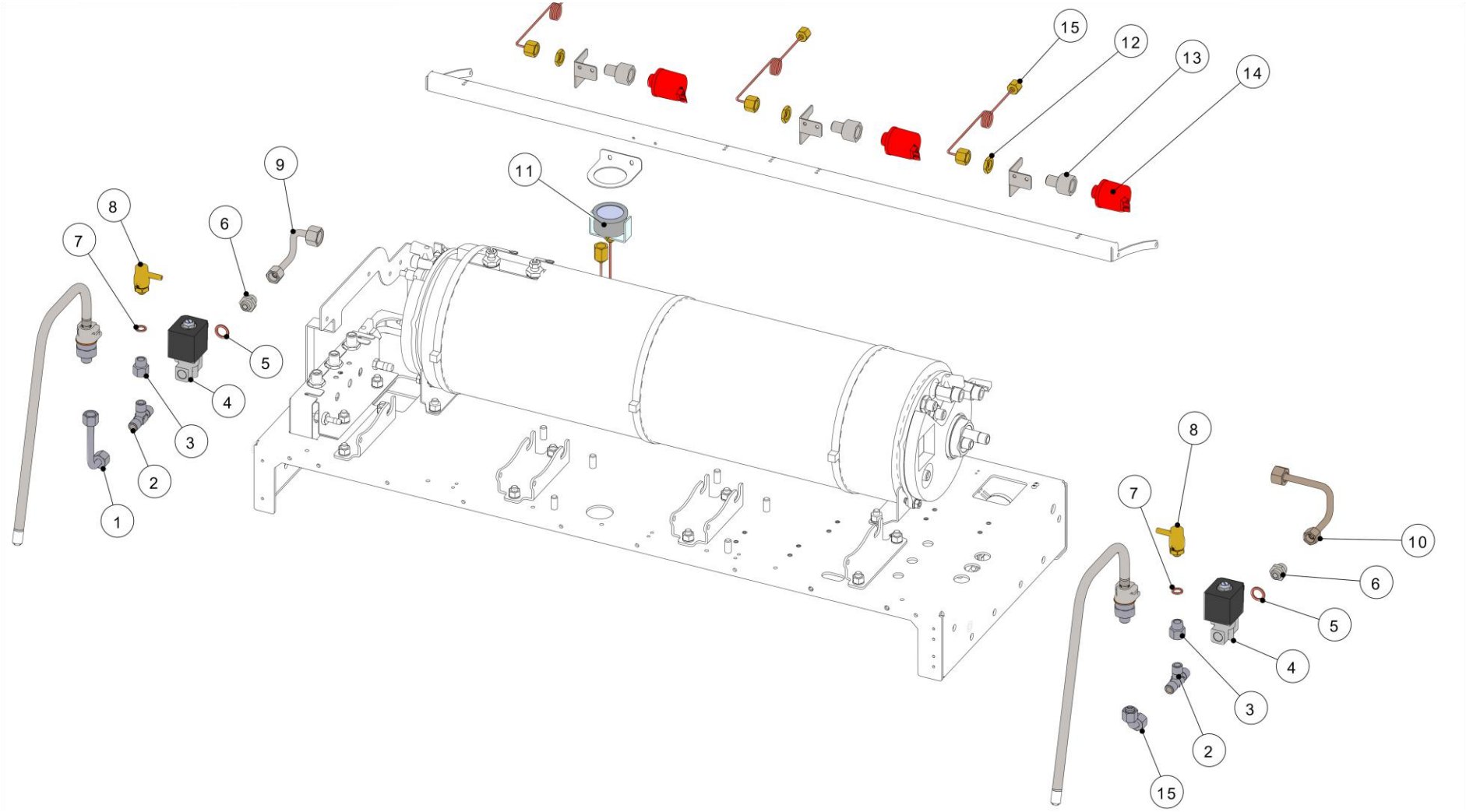

la marzocco
handmade in florence

HYDRAULIC ASSEMBLY

Item	Part number	Description
0001	T.1.313.SX	TUBE LEFT PROP.SOLENOID V.-S.WAND TR.
0002	A.2.002.01	TEE FITTING R1/4M WR13 BRASS TREATED
0003	A.5.154	FITTING G1/4F-G1/8F WR17 H21,6 TREATED
0004	B.2.020.01	SOLENOID VALVE PROP. 2 WAY D5,5 S/S 24V
0005	L100/1A	WASHER 13,5X19X1,5 COPPER
0006	A.5.019	NIPPLE G1/4M-G1/4M WR19 H21,5 S/S
0007	L100/D	WASHER 10X14X1,5 COPPER
0008	L192.03	VACUUM BREAKER VALVE G1/8M W/SWIVEL BODY
0009	T.1.314.SX	TUBE S.B.-LEFT PROP.S.V. STRADA X-S TR.
0010	T.1.314.DX	TUBE S.B.-RIGHT PROP.S.V. STRADA X-S TR.
0011	E.3.002.01	PRESSURE GAUGE 0-3 BEIGE W/CAPILLARY
0012	L146	NUT G1/4 H4,5 WR19 BRASS
0013	A.5.021	FITTING G1/4M-G3/8F WR22 S/S
0014	E.1.070.R	PRESSURE TRANSDUCER LEVA 2-3GR W/CON.
0015	TL11/234	TUBE PRESSURE GAUGE - COFFEE B. 2-3-4GR
0016	T.1.313.DX	TUBE RIGHT PROP.SOLENOID V.-S.WAND TR.

la marzocco
handmade in florence

HYDRAULIC ASSEMBLY

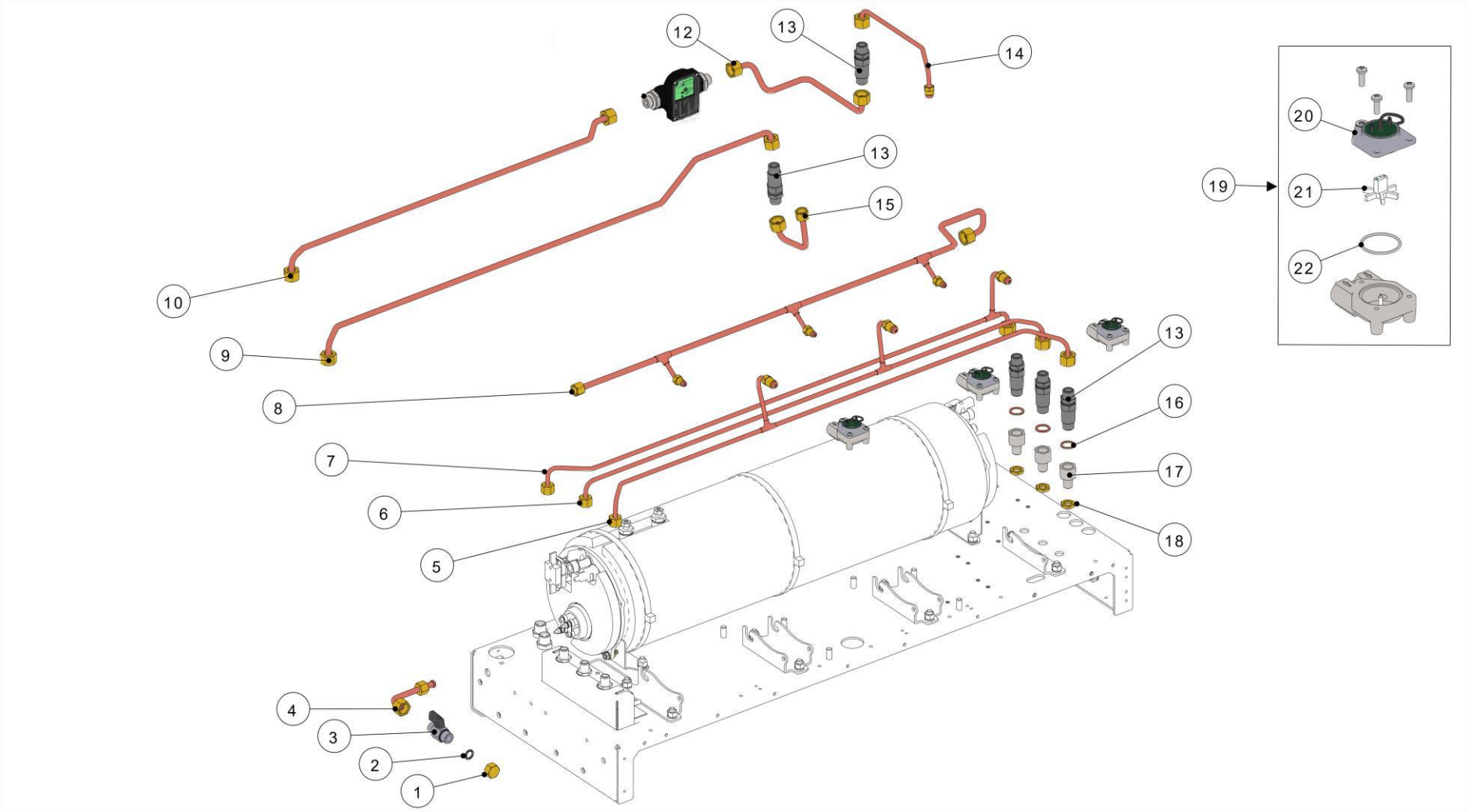

la marzocco
handmade in florence

HYDRAULIC ASSEMBLY

Item	Part number	Description
0001	L030	CAP NUT G3/8 H11 WR19 BRASS
0002	H.1.004	O-RING 2,62X10,77 EPDM 70 ShA
0003	L164/MM.02	BALL VALVE G3/8M-G3/8M BRASS TREATED
0004	T.1.123	DRAIN TUBE STEAM BOILER STRADA
0005	T.1.332.2	TUBE WATER INLET GROUP 1 STRADA X 2GR
0005	T.1.332.3	TUBE WATER INLET GROUP 1 STRADA X 3GR
0005	T.1.332.3	TUBE WATER INLET GROUP 1 STRADA X 3GR
0006	T.1.333.2	TUBE WATER INLET GROUP 2 STRADA X 2GR
0006	T.1.333.3	TUBE WATER INLET GROUP 2 STRADA X 3GR
0007	T.1.334.3	TUBE WATER INLET GROUP 3 STRADA X 3GR
0008	T.1.336.2	AUTOSTEAM TUBE STRADA X 2GR
0008	T.1.336.3	AUTOSTEAM TUBE STRADA X 3GR
0009	T.1.103	TUBE INLET MANIFOLD-CHECK V. COFFEE 3GR
0010	T.1.315.3	TUBE INLET MANIFOLD - WATER SENSOR 3GR
0012	T.1.316	TUBE WATER SENSOR - CHECK V. STEAM
0013	L032/P.01	CHECK VALVE G3/8M TREATED
0014	T.1.115	TUBE CHECK V. - TEA MIX V. STRADA
0015	T.1.104	TUBE CHECK V. - COFFEE MIXING V. STRADA
0016	L180/1	WASHER 22X17X1,5 COPPER
0017	A.5.021	FITTING G1/4M-G3/8F WR22 S/S
0018	L146	NUT G1/4 H4,5 WR19 BRASS

la marzocco
handmade in florence

HYDRAULIC ASSEMBLY

Item	Part number	Description
0019	LAD070.01	FLOW METER
0020	LAD070/S.01	LID W/CABLE FIELD SENSOR FLOWMETER
0021	LAD070/V	IMPELLER FLOWMETER
0022	LAD070/S1	O-RING 2X28 FLOWMETER SILICONE 70ShA

la marzocco
handmade in florence

HYDRAULIC ASSEMBLY

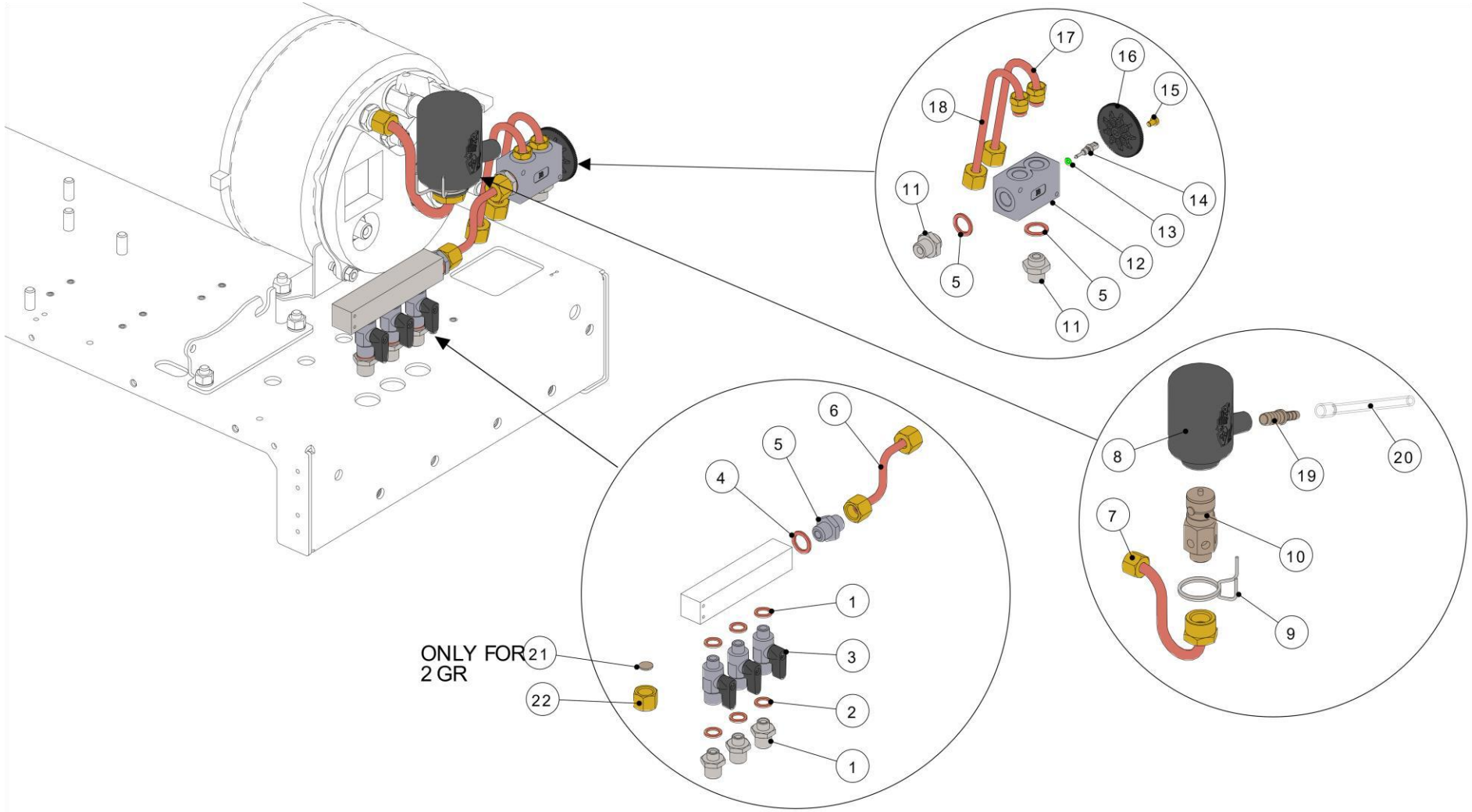

la marzocco
handmade in florence

HYDRAULIC ASSEMBLY

Item	Part number	Description
0001	A.5.156	NIPPLE G1/8M-G1/4M WR17 S/S
0002	L100/D	WASHER 10X14X1,5 COPPER
0003	B.2.016.01	BALL VALVE G1/8F-R1/8M BRASS TREATED
0004	L100/1A	WASHER 13,5X19X1,5 COPPER
0005	L037/3.01	NIPPLE G1/4M-G1/4M WR19 H25.5 BRASS TR.
0006	T.1.331	TUBE MIXING VALVE - MANIFOLD STRADA X
0007	T.1.122.01	TUBE STEAM B. - SAFETY VALVE STRADA
0008	F.2.062	SAFETY VALVE CLOUSURE
0009	I.8.003	MOLLA A TORSIONE 2,5X32
0010	B.2.024.01	SAFETY VALVE G3/8 1,8 BAR NO TEA
0011	A.5.019	NIPPLE G1/4M-G1/4M WR19 H21,5 S/S
0012	B.2.007.02	MIXING VALVE BODY TR.
0013	H.1.007.01	O-RING 1,78x2,9 FKM 70 ShA
0014	F.3.008	THERMOSTATIC VALVE PIN
0015	VITE4X6	SCREW M4X6 CHEESE BRASS
0016	F.1.016	THERMOSTATIC VALVE ADJUSTMENT KNOB
0017	T.1.106	TUBE MIXING VALVE - PRE-HEATER STRADA
0018	T.1.107	TUBE PRE-HEATER - MIXING VALVE STRADA
0019	F.8.021	HOSE CONNECTOR D10-D6 BRASS
0020	T.4.001	ANTISUCTION VALVE SILICONE TUBE
0021	L137/4	FERRULE BLIND 11X3 TREATED
0022	L130/4	FITTING G1/4F H13 WR17 BRASS

la marzocco
handmade in florence

HYDRAULIC ASSEMBLY

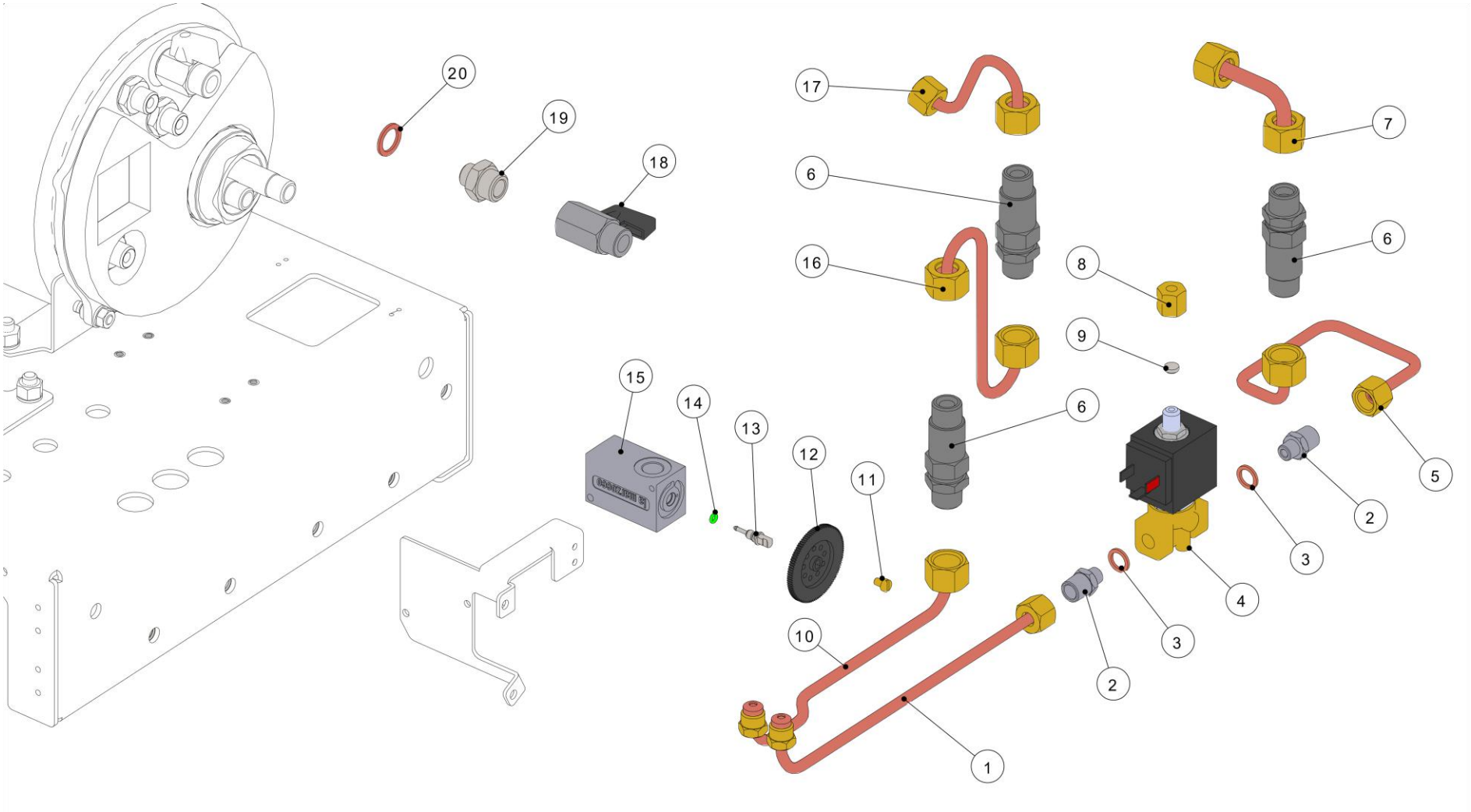

la marzocco
handmade in florence

HYDRAULIC ASSEMBLY

Item	Part number	Description
0001	T.1.197	TUBE MIX V. - S.V. STEAM B. INLET LEVA
0002	L053/1.02	NIPPLE R1/8M-R1/4M WR14 BRASS TR.
0003	L100/D	WASHER 10X14X1,5 COPPER
0004	B.2.033	SOLENOID VALVE 3 WAY 24V
0005	T.1.329	TUBE INLET S.V. - CHECK VALVE STRADA X
0006	L032/P.01	CHECK VALVE G3/8M TREATED
0007	T.1.283	TUBE WATER SENSOR - INLET FITTING
0008	L134	FITTING G1/8F H14 WR14 D4 BRASS
0009	L134/4	FERRULE BLIND 8X4 TREATED
0010	T.1.199	TUBE MIX V. - CHECK VALVE LEVA
0011	VITE4X6	SCREW M4X6 CHEESE BRASS
0012	F.1.016	THERMOSTATIC VALVE ADJUSTMENT KNOB
0013	F.3.008	THERMOSTATIC VALVE PIN
0014	H.1.007.01	O-RING 1,78x2,9 FKM 70 ShA
0015	B.2.007.02	MIXING VALVE BODY TR.
0016	T.1.198	TUBE CHECK V. - STEAM B. CHECK V. LEVA
0017	T.1.119	TUBE STEAM B. EXIT-CHECK VALVE STRADA
0018	L164.02	BALL VALVE G3/8M-G3/8F BRASS TREATED
0019	A.5.188	NIPPLE G3/8M-G1/4M WR20 S/S
0020	L100/1A	WASHER 13,5X19X1,5 COPPER

la marzocco
handmade in florence

VALVES AND FITTINGS

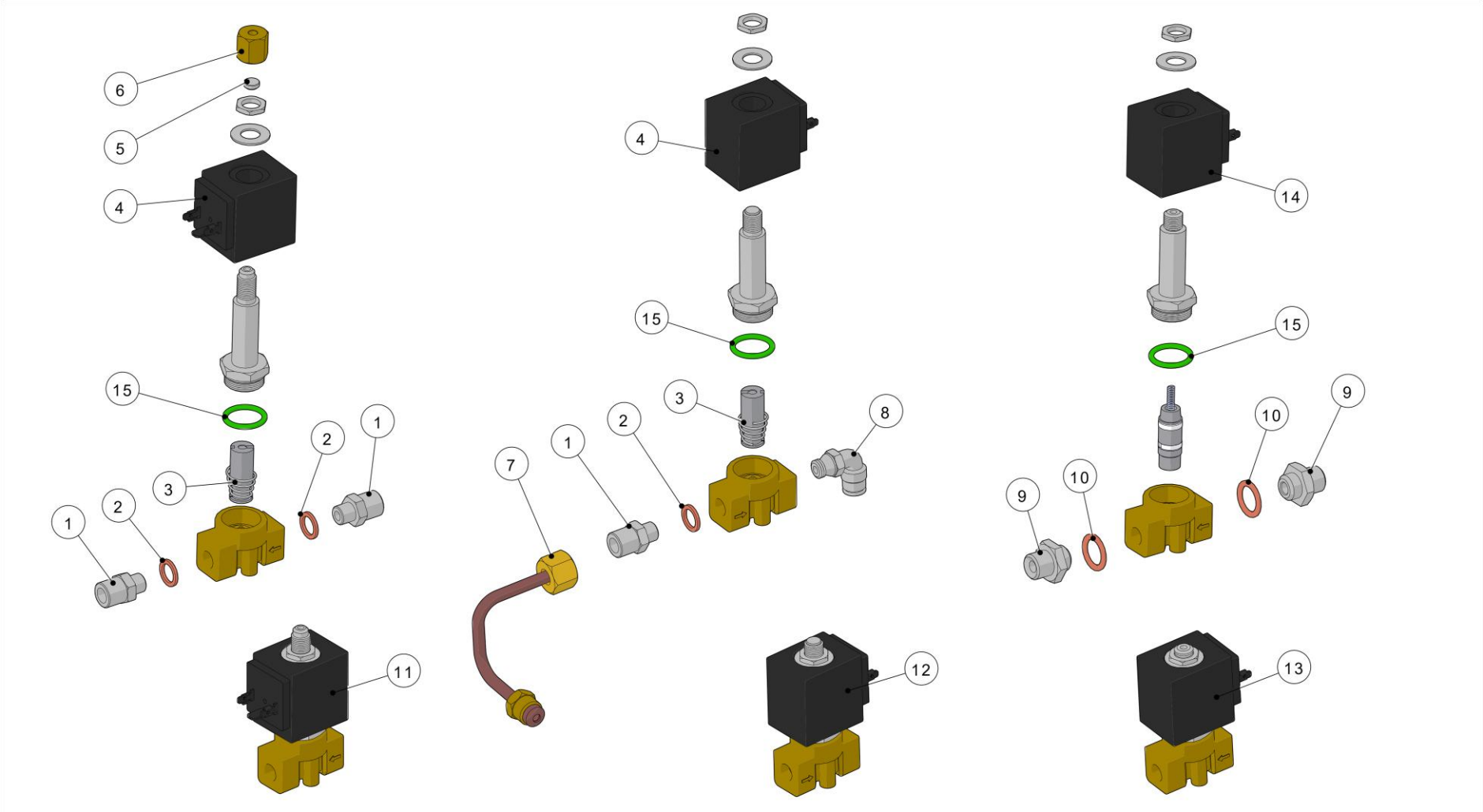

la marzocco
handmade in florence

VALVES AND FITTINGS

Item	Part number	Description
0001	T.1.197	TUBE MIX V. - S.V. STEAM B. INLET LEVA
0002	L053/1.02	NIPPLE R1/8M-R1/4M WR14 BRASS TR.
0003	L100/D	WASHER 10X14X1,5 COPPER
0004	B.2.033	SOLENOID VALVE 3 WAY 24V
0005	T.1.329	TUBE INLET S.V. - CHECK VALVE STRADA X
0006	L032/P.01	CHECK VALVE G3/8M TREATED
0007	T.1.283	TUBE WATER SENSOR - INLET FITTING
0008	L134	FITTING G1/8F H14 WR14 D4 BRASS
0009	L134/4	FERRULE BLIND 8X4 TREATED
0010	T.1.199	TUBE MIX V. - CHECK VALVE LEVA
0011	VITE4X6	SCREW M4X6 CHEESE BRASS
0012	F.1.016	THERMOSTATIC VALVE ADJUSTMENT KNOB
0013	F.3.008	THERMOSTATIC VALVE PIN
0014	H.1.007.01	O-RING 1,78x2,9 FKM 70 ShA
0015	B.2.007.02	MIXING VALVE BODY TR.
0016	T.1.198	TUBE CHECK V. - STEAM B. CHECK V. LEVA
0017	T.1.119	TUBE STEAM B. EXIT-CHECK VALVE STRADA
0018	L164.02	BALL VALVE G3/8M-G3/8F BRASS TREATED
0019	A.5.188	NIPPLE G3/8M-G1/4M WR20 S/S
0020	L100/1A	WASHER 13,5X19X1,5 COPPER

la marzocco
handmade in florence

COFFEE BOILER

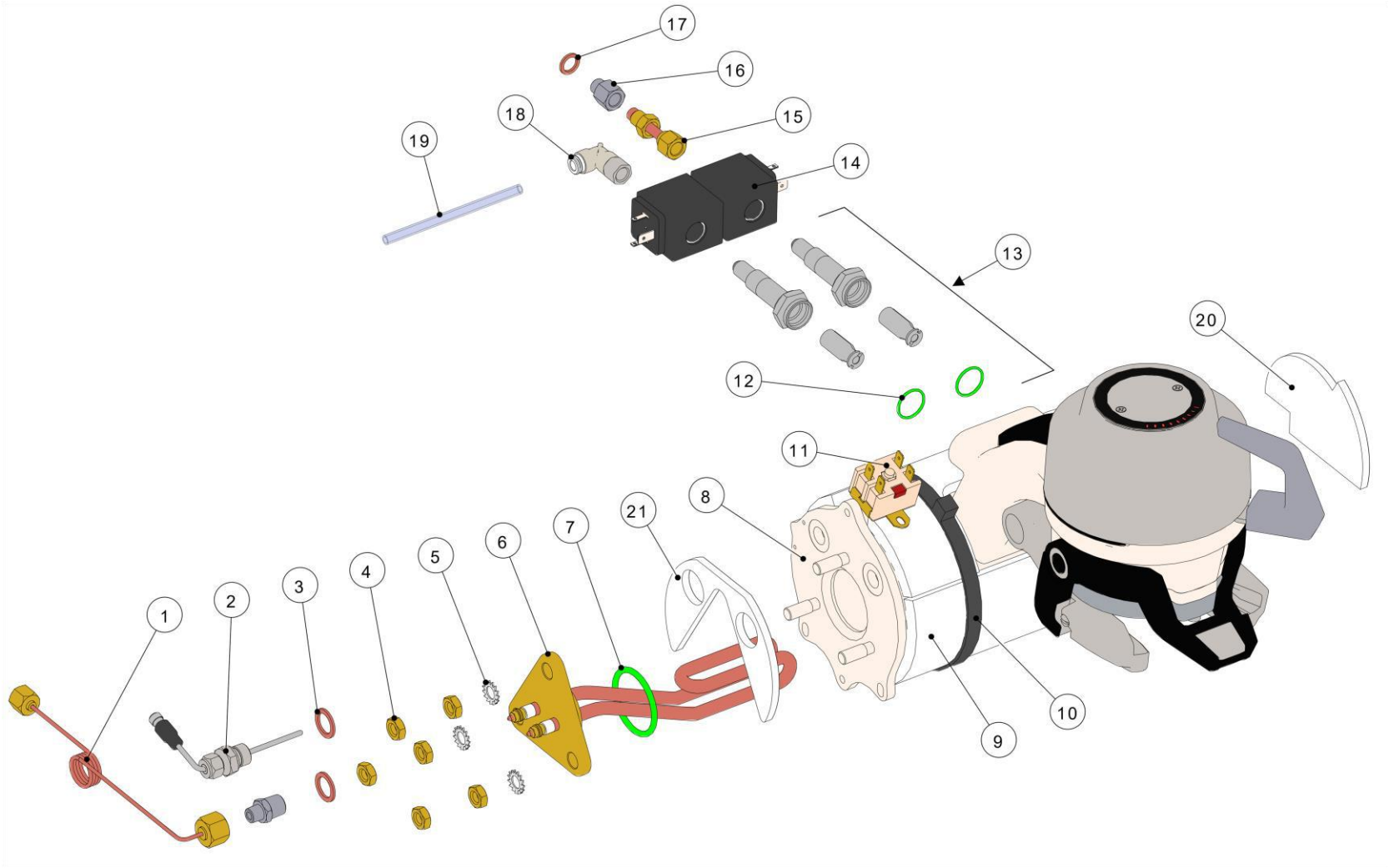

la marzocco
handmade in florence

COFFEE BOILER

Item	Part number	Description
0001	TL11/234	TUBE PRESSURE GAUGE - COFFEE B. 2-3-4GR
0002	E.1.005	TEMPERATURE PROBE PT1000 100MM
0003	L100/1A	WASHER 13,5X19X1,5 COPPER
0004	I.1.025	NUT M8 H5 WR13 BRASS
0005	ROND_DENT_8	TOOTH LOCK WASHER 8X14,7X2 S/S A2
0006	E.6.004.03	HEATING ELEMENT W800 V220 TRIANG. FLANGE
0006	E.6.006.02	HEATING ELEMENT W500 V200 TRIANG.FL. RP
0007	F.2.014.01	O-RING 3,53X37,69 FKM 70 SH VERDE
0008	L.1.021.R	COFFEE BOILER STRADA STRAIGHTIN COMPLETE
0009	F.7.015	INSULATION PANEL COFFEE BOILER LEVA 1GR
0010	A.5.016.01	PLASTIC FASTENER 750X7.5
0011	L276/B	SAFETY THERMOSTAT 2P 130C 250V
0012	H.1.022	O-RING 1,78X15,60 VITON 70 SH
0013	B.2.006.02	SOLENOID VALVE 3 WAY NO COIL
0014	L100/G.01	SV COIL 220-240V 8W UL CSA VDE
0015	T.1.337	TUBE STEAM AUTO CLEANING
0016	A.5.177	FITTING G1/8F-G1/8M WR14 S/S
0017	L100/D	WASHER 10X14X1,5 COPPER
0018	A.2.103	FITTING PUSH-IN 90° 6-R1/4M BRASS TR.
0019	T.3.006	PTFE TUBE 6x4mm
0020	F.7.030.DX	INSULATING RGT SIDE SINGLE CB
0021	F.7.030.SX	INSULATING LFT SIDE SINGLE CB

la marzocco
handmade in florence

COFFEE BOILER

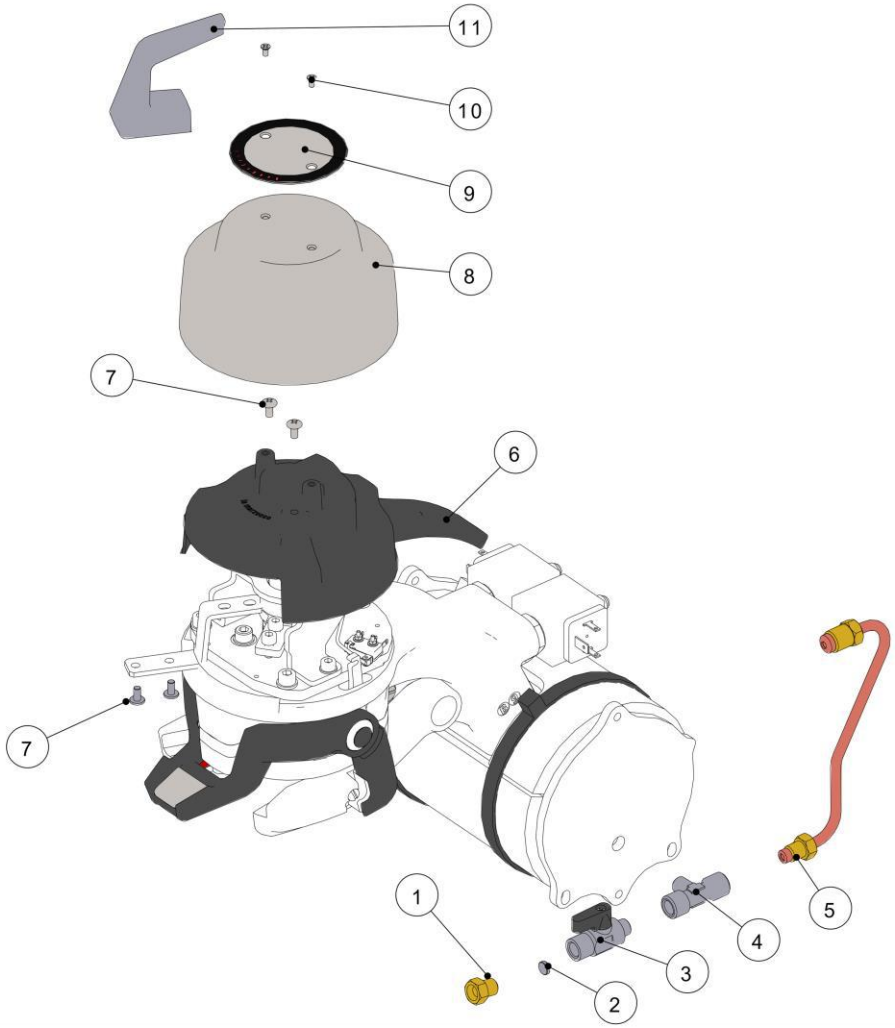

la marzocco
handmade in florence

COFFEE BOILER

Item	Part number	Description
0001	L133	FITTING G1/8M H16 WR13 BRASS
0002	L134/4	FERRULE BLIND 8X4 TREATED
0003	B.2.016.01	BALL VALVE G1/8F-R1/8M BRASS TREATED
0004	A.2.012.01	TEE FITTING R1/8M-G1/8F-G1/8F WR10 TR
0005	T.1.335	TUBE FLOWMETER - COFFEE B. STRADA X
0006	F.1.278	COVER WITH WIRE PROTECTION STRADA X
0007	I.1.006	SCREW M4X8 PHILLIPS BUTTON HEAD S/S A2
0008	C.1.568	COVER GROUP STRADA X PAINTED
0009	D.4.063	GROUP COVER STRADA X
0010	I.1.060	SCREW M3X6 PHILLIPS COUNTERSUNK S/S A2
0012	F.1.204	GROUP SILICONE GASKET STRADA X

la marzocco
handmade in florence

COFFEE BOILER

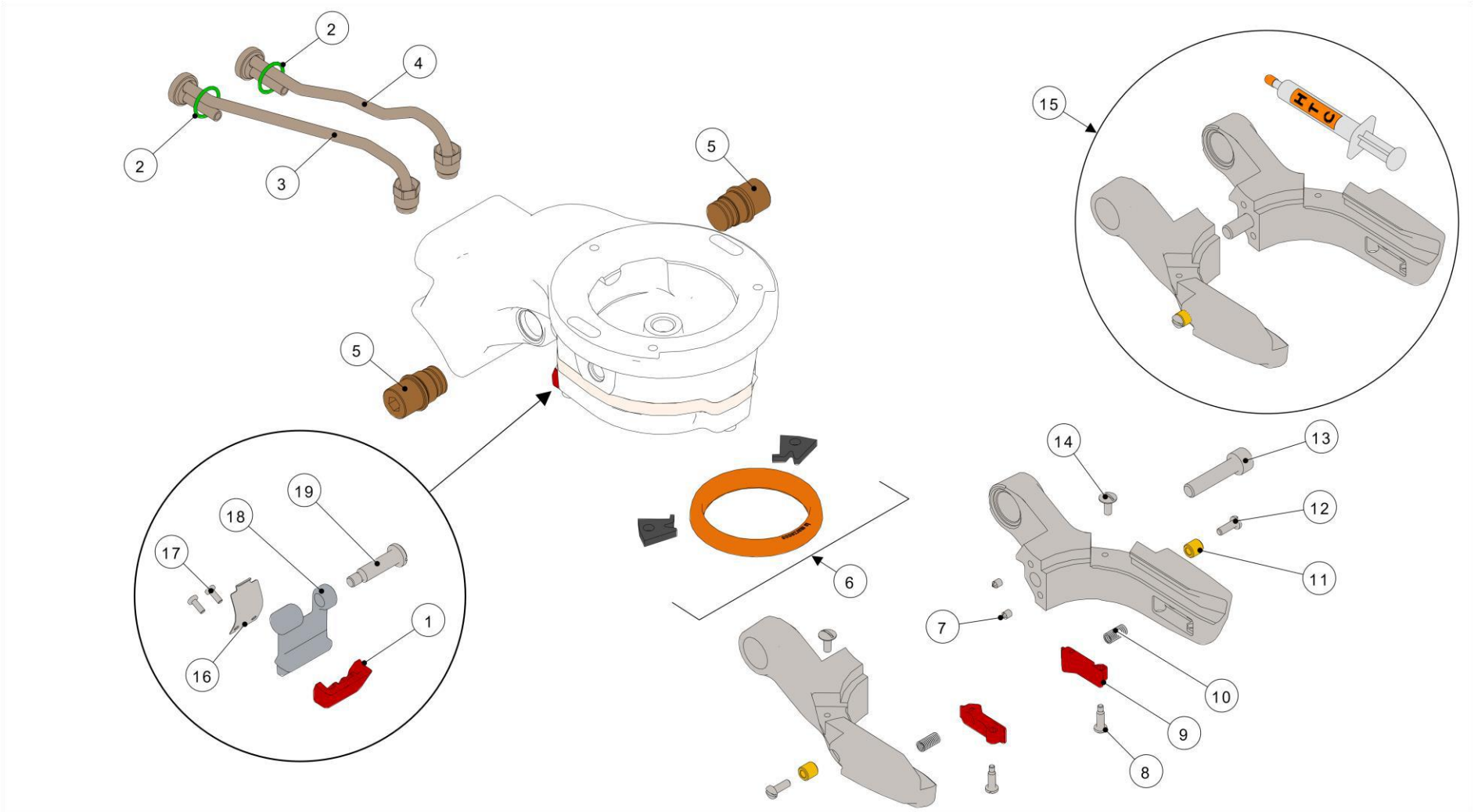

la marzocco
handmade in florence

COFFEE BOILER

Item	Part number	Description
0001	F.1.103.01	KNOB CLEANING RELEASE RAL3001
0002	H.1.009	O-RING 1,78x15,6 FKM 70 ShA
0003	T.1.094.01	TUBE PISTON STRAIGHT-IN
0004	TL30.R	INTERNAL TUBE GS3 GROUP ASSEMBLY
0005	A.1.028	AXLE ROTATION HOLDER PORTAFILTER
0006	1207	GROUP GASKET & ANTI-SHOCK STRAIGHT-IN
0007	I.1.101	SOCKET GRUB SCREW M4X6 S/S
0008	I.1.127	SCREW SHOULDER M3x10 - DIN 923
0009	F.1.104.01	LEVER CLICKER HOLDER PORTAFILTER RAL3001
0010	F.3.102	SPRING LEVER CLICKER
0011	F.8.016	BUSH 8X8X4,2 BRONZE
0012	I.1.154	SCREW M4X12 BUSH LOCKING
0013	I.1.139	SCREW M8X35 SOCKET CUP S/S
0014	I.1.162	SCREW M4X10 SLOTTED HEAD SPECIAL S/S
0015	1203	KIT FOR HOLDER PORTAFILTER STRAIGHT-IN
0016	F.3.101	SPRING RELOCATION LEVER
0017	VITE3X8	SCREW M3X8 PHILLIPS ROUND-PAN S/S A2
0018	F.8.011.01	LEVER CLEANING RELEASE
0019	I.1.126	SCREW SHOULDER M6x25 - DIN 923

la marzocco
handmade in florence

COFFEE BOILER

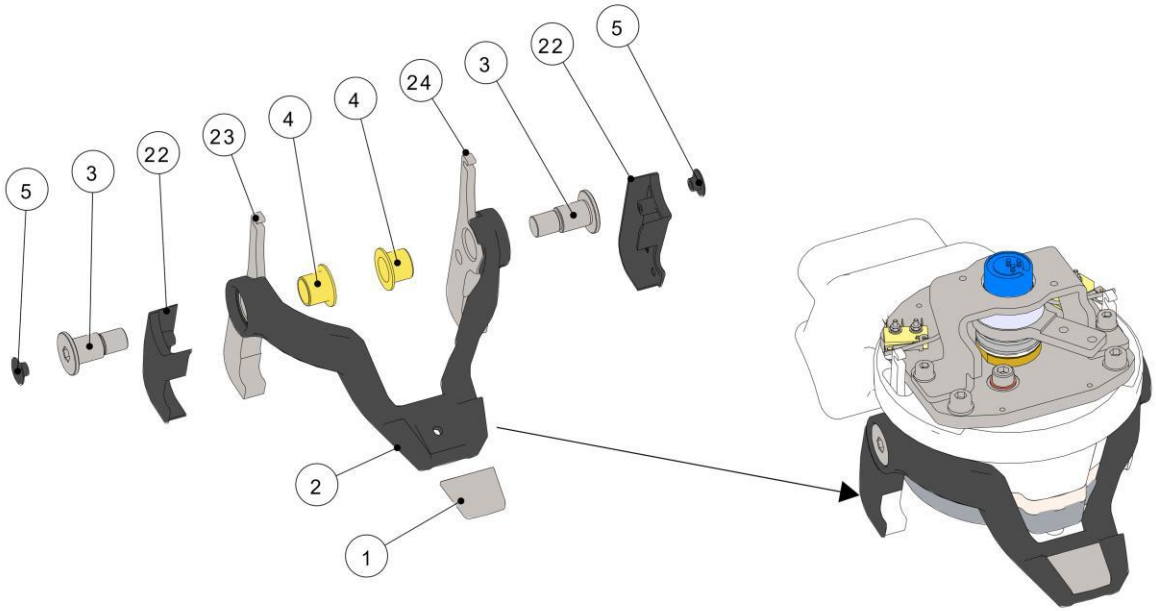

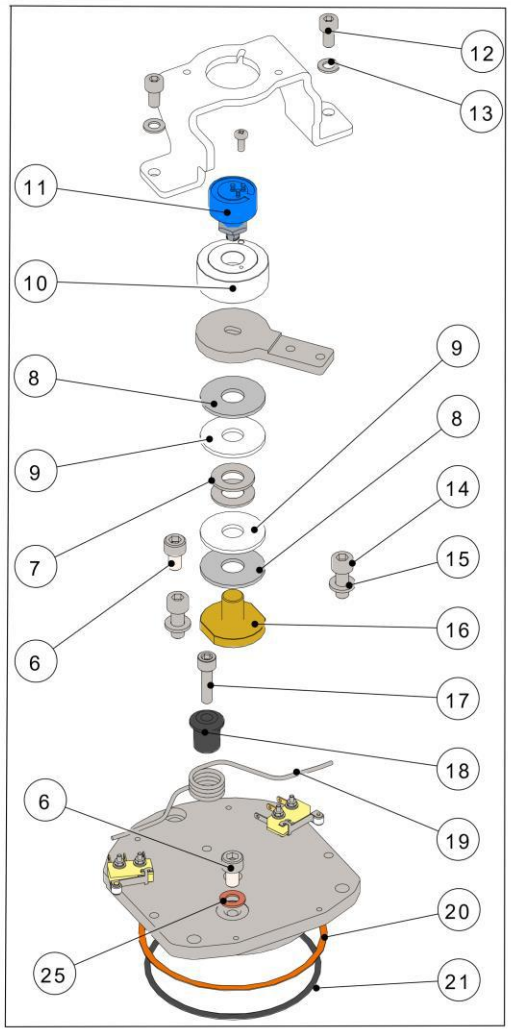

la marzocco
handmade in florence

COFFEE BOILER

Item	Part number	Description
0001	F.3.107.01	COVER BRACKET STRAIGHT-IN LINEA
0002	F.1.112.01	BRACKET LOCK STRAIGHT-IN
0003	F.3.100	SCREW PIN M10x13 H28,5 S/S
0004	1052	KIT FOR ARM CLICKER STRAIGHT-IN STRADA
0005	F.1.110	CAP D13 SOCKET HEAD M8 ES6 LDPE BLACK
0006	L120/2	SCREW M6X10 SOCKET CAP S/S A2
0007	I.5.003	BELLEVILLE SPRING 10X20X1,3
0008	I.1.033	WASHER 10.7X30X1.8 S/S A2
0009	F.1.032	WASHER 10X30X2 PTFE
0010	F.4.006	SLOT MECHANICAL POTENTIOMETER
0011	E.2.048	POTENTIOMETER 10KOHM 340° IP65
0012	I.1.005	SCREW M5X10 SOCKET CAP S/S A2
0013	I.1.039	WASHER 5,4X10X1 S/S A2
0014	I.1.124	SCREW M6X16 SOCKET CAP S/S A2
0015	RONDELLA6X12	WASHER 6,4X12X1,5 S/S A2
0016	F.8.010	SHAFT MECHANICAL POTENTIOMETER
0017	I.1.028	SCREW M5X20 SOCKET CAP S/S
0018	F.1.285	BUSH FOT TORSIONAL SPRING
0019	I.1.122	SOCKET GRUB SCREW M6X6 TE S/S
0020	L103/B	FIBER GASKET 87X81X0,5
0021	L103/A	O-RING 75,87x2,62 FKM 70 ShA
0022	F.1.274	COVER FOR RIGHT LEFT ARM STRAIGHT-IN
0023	L120/2A	WASHER 6,3X12X1 COPPER

la marzocco
handmade in florence

COFFEE BOILER

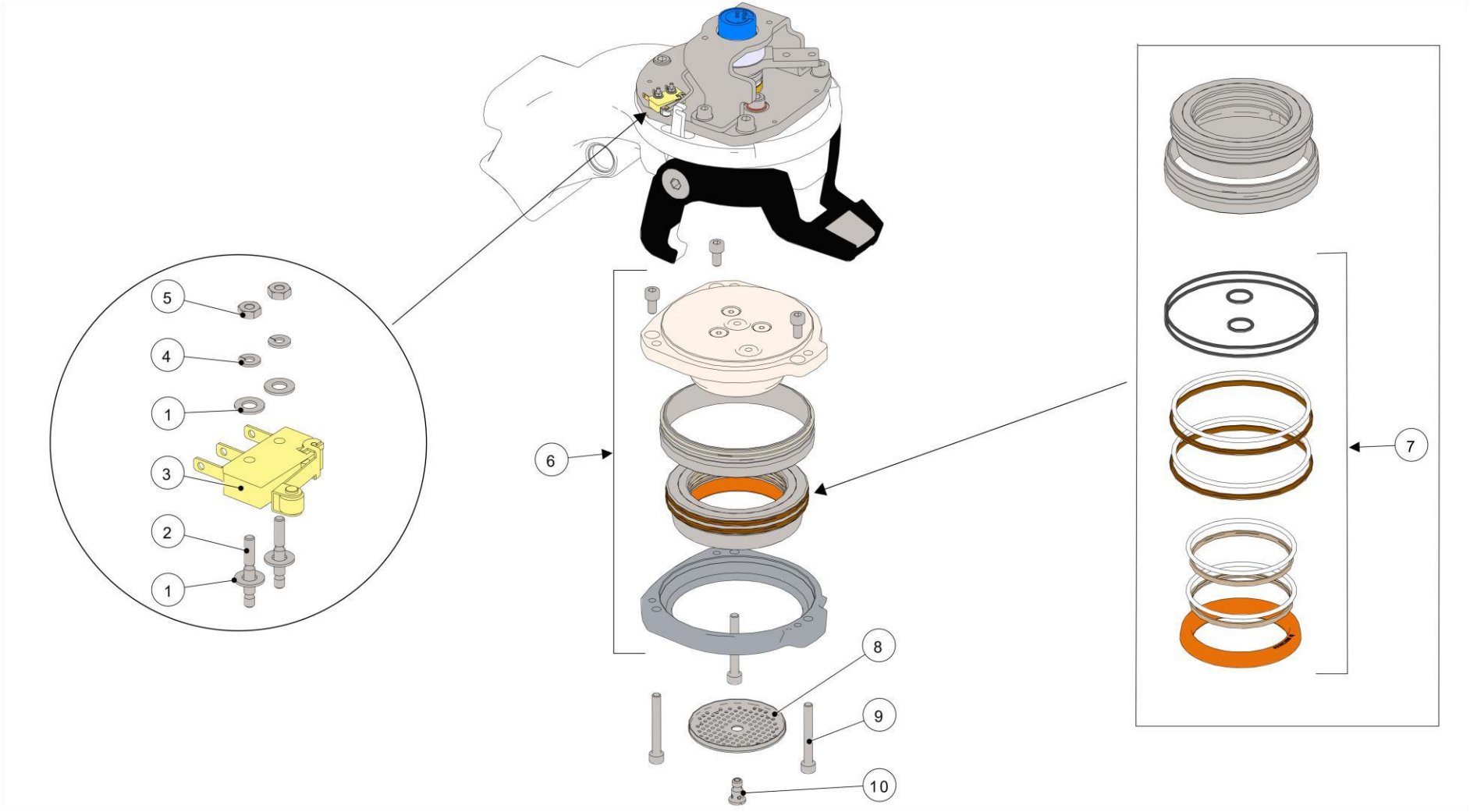

la marzocco
handmade in florence

COFFEE BOILER

Item	Part number	Description
0001	F.3.107.01	COVER BRACKET STRAIGHT-IN LINEA
0002	F.3.114	PIN FOR MICROSWITCH STRAIGHT-IN
0003	E.2.070	MICROSWITCH STRAIGHT-IN 150°C
0004	I.1.137	SPLIT WASHER M2 S/S A2
0005	I.1.111	NUT M2 H1,6 WR4 S/S
0006	SA565	PISTON ASSEMBLY STRADA X
0007	1205	REBUILD KIT FOR STRAIGHT-IN SEALING
0008	A.5.095	COFFEE SHOWER SCREEN W/LOGO H3.8
0009	I.1.007	SCREW M5X40 SOCKET CAP S/S A2
0010	A.5.110	DIFFUSER SCREW M6 Ø 10 S/S

la marzocco
handmade in florence

GEAR PUMP

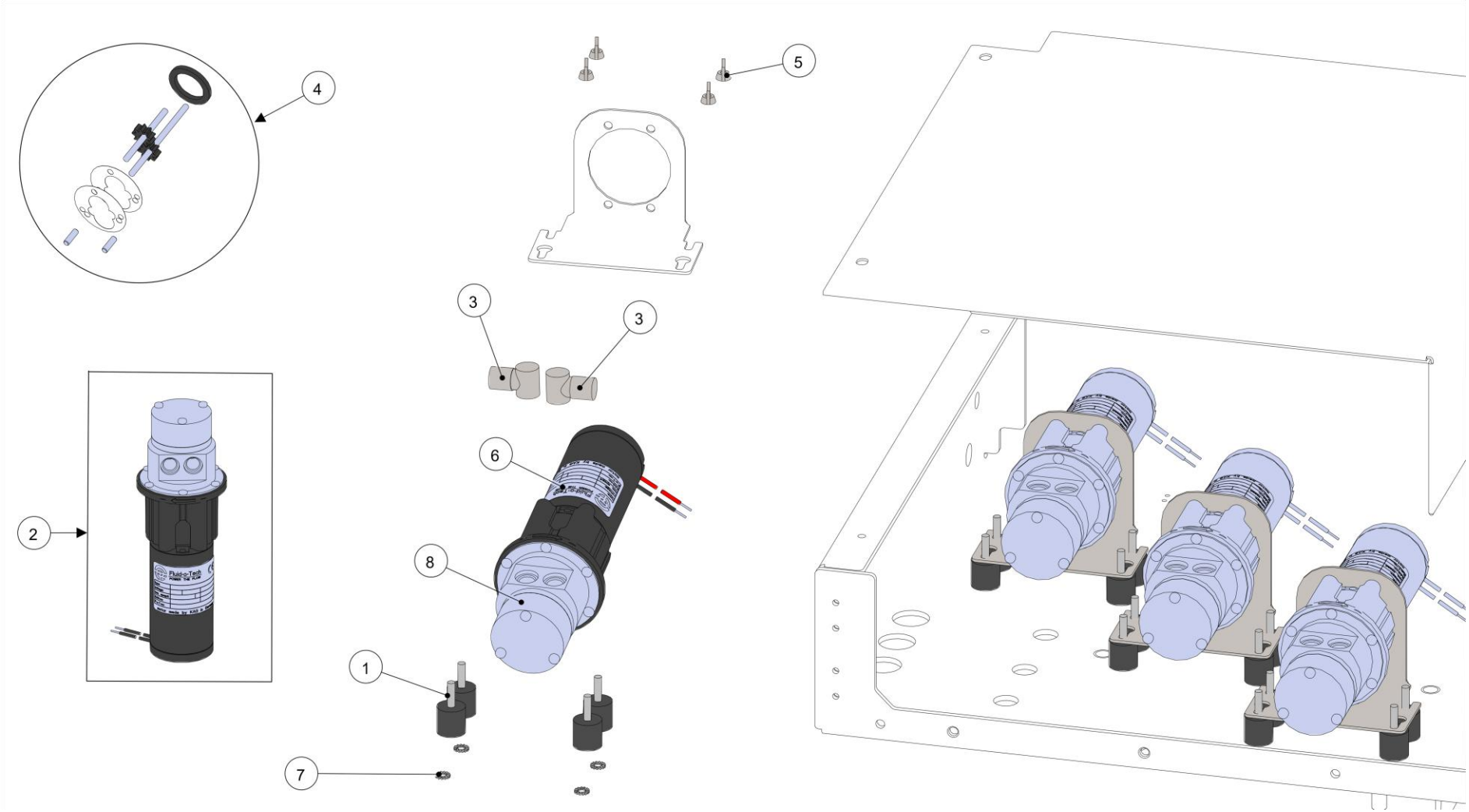

la marzocco
handmade in florence

GEAR PUMP

Item	Part number	Description
0001	F.2.022	ANTI VIBRATION RUBBER BOBBIN M/F M4
0002	E.3.035	GEAR PUMP W/MOTOR 24V STRADA X
0003	F.3.173	SWIVEL FITTING G1/8M WITH OR 2-109
0004	E.3.006.K.01	GEAR MECHANISM KIT FOR GEAR PUMP
0005	I.1.035	WING NUT M4 H3 S/S A2
0006	E.7.006	MGCS11S MOTORE KAGM42X30I 24V
0007	ROND_DENT_4	TOOTH LOCK WASHER 4X8X1 GALVANIZED

la marzocco
handmade in florence

GEAR PUMP

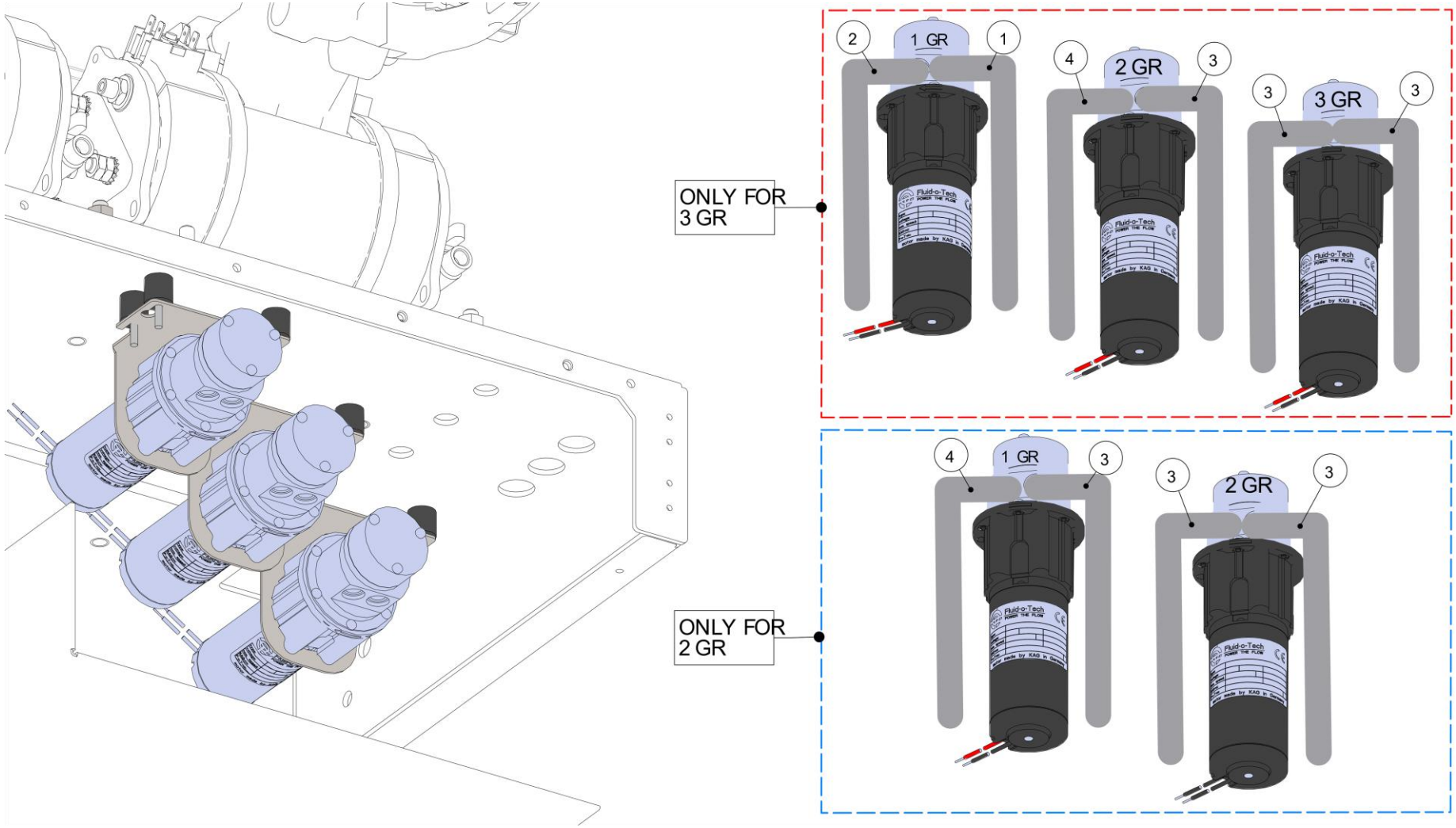

la marzocco
handmade in florence

GEAR PUMP

Item	Part number	Description
0001	T.5.012	BRAIDED HOSE CM.27 G1/4F-G1/4F
0002	T.5.013	BRAIDED HOSE CM.63 G1/4F-G1/4F
0003	T.5.011	BRAIDED HOSE CM.21 G1/4F-G1/4F
0004	T.5.014	BRAIDED HOSE CM.42 G1/4F-G1/4F

la marzocco
handmade in florence

STEAM BOILER

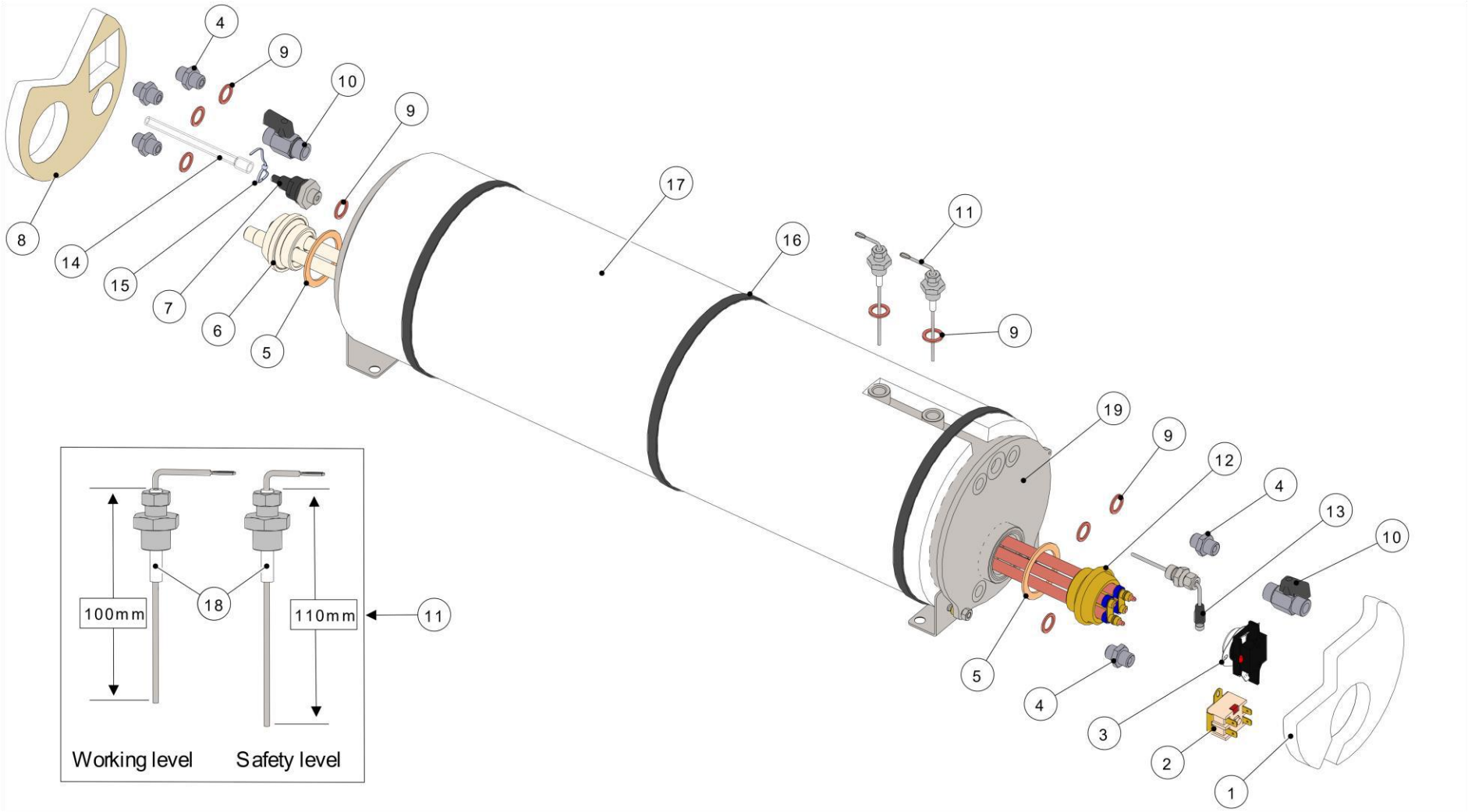

la marzocco
handmade in florence

STEAM BOILER

Item	Part number	Description
0001	F.7.039	INSULATING LEFT FLAT SIDE SB
0002	L276/B	SAFETY THERMOSTAT 2P 130C 250V
0003	E.5.005	SAFETY THERMOSTAT 2P TRIP FREE 130C 600V
0004	L037/3.01	NIPPLE G1/4M-G1/4M WR19 H25.5 BRASS TR.
0005	LR360	1-1/4 HEATER ELEMENT GASKET
0006	T.1.015.02	PREHEATER 2GR L384 MM W/Y JUNCTION
0006	T.1.019.02	PREHEATER 3/4GR L584 MM W/Y JUNCTION
0007	B.2.029.01	VALVE VACUUM BREAKER SMA G1/4 S/S FKM
0008	F.7.040	INSULATING RIGHT FLAT SIDE SB
0009	L100/1A	WASHER 13,5X19X1,5 COPPER
0010	L164/MM.02	BALL VALVE G3/8M-G3/8M BRASS TREATED
0011	LA052	WATER LEVEL PROBE
0012	LR357/380B.04	HEATING ELEMENT W3000 V380 CM39 1-1/4
0012	LR357/220B.04	HEATING ELEMENT W3000 V220 CM39 1-1/4
0012	LR357/200B.04	HEATING ELEMENT W3000 V200 CM39 1-1/4
0012	E.6.023	HEAT.ELEM W4000 V200 CM50 1-1/4 4POLE TR
0012	E.6.017.01	HEATING ELEMENT W3000 V240 CM39 1-1/4
0012	E.6.009.03	HEAT.ELEM W4000 V220 CM50 1-1/4 4POLE
0012	E.6.008.02	HEAT.ELEM W4000 V380 CM50 1-1/4 4POLE TR
0013	E.1.005	TEMPERATURE PROBE PT1000 100MM
0014	T.4.001	ANTISUCTION VALVE SILICONE TUBE

la marzocco
handmade in florence

STEAM BOILER

Item	Part number	Description
0015	L338/L100.01	CABLE TIE 120x2,5MM HIGH TEMPERATURE
0016	A.5.016.01	PLASTIC FASTENER 750X7.5
0017	F.7.002.01	INSULATION PANEL 2GR STRADA STEAM B.
0017	F.7.003.01	INSULATION PANEL 3GR STRADA STEAM B.
0018	LA052/1	TEFLON INSULATOR PROBE
0019	L.1.003.2.R	STEAM BOILER FLAT SIDE 2GR
0019	L.1.003.3.R	STEAM BOILER FLAT SIDE 3GR

la marzocco
handmade in florence

SCALES VERSION – BODY PANEL ASSEM.

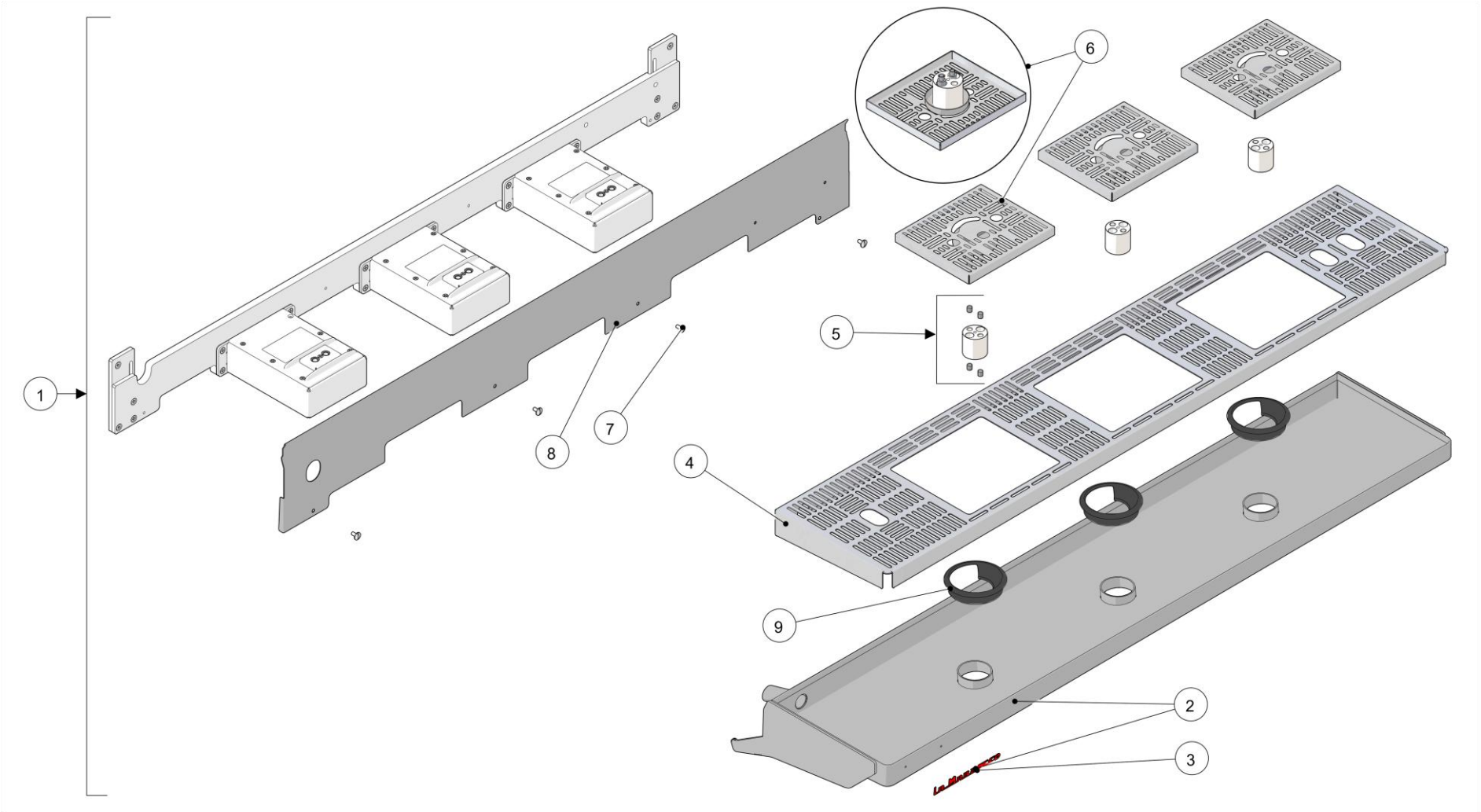

la marzocco
handmade in florence

SCALES VERSION – BODY PANEL ASSEM.

Item	Part number	Description
0001	959-2	RETROFIT KIT SCALES STRADA X-S 2GR
0001	959-3	RETROFIT KIT SCALES STRADA X-S 3GR
0002	C.1.280.2.01	TRAY DRAIN STRADA 2GR W/SCALES
0002	C.1.280.3.01	TRAY DRAIN STRADA 3GR W/SCALES
0003	D.4.061	LOGO LA MARZOCCO STRADA X
0004	C.1.281.2	GRID DRAIN STRADA 2GR W/SCALES
0004	C.1.281.3	GRID DRAIN STRADA 3GR W/SCALES
0005	F.1.084.R	ASSEMBLED SUPPORT WITH MAGNETS
0006	C.1.278.R	GRID SCALE COMPLETE
0006	I.1.099	SCREW M4X10 MUSHROOM SLOTTED HEAD S/S
0008	C.1.279.2	PANEL LOWER FRONT STRADA 2GR W/SCALES
0008	C.1.279.3	PANEL LOWER FRONT STRADA 3GR W/SCALES
0009	F.1.089	PROTECT.WATER TRAY DRAIN STRADA W/SCALES

la marzocco
handmade in florence

SCALES VERSION – SCALES ASSEMBLY

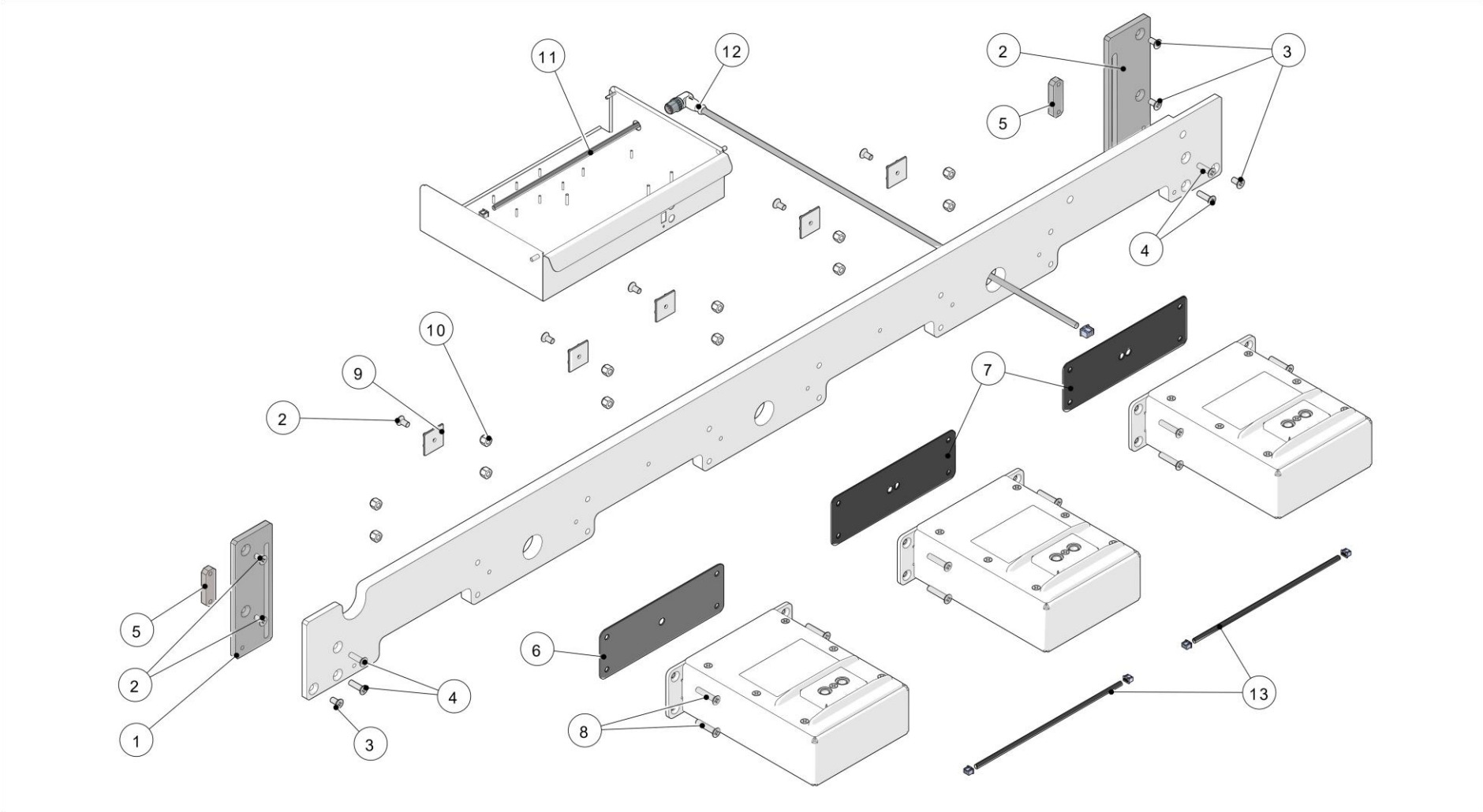

la marzocco
handmade in florence

SCALES VERSION – SCALES ASSEMBLY

Item	Part number	Description
0001	C.1.231	BRACKET LEFT SCALE STRADA
0002	C.1.270	BRACKET RIGHT SCALE STRADA
0003	I.1.057	SCREW M4X8 PHILLIPS COUNTERSUNK S/S A2
0004	I.1.093	SCREW M4X14 PHILLIPS COUNTERSUNK S/S A2
0005	F.3.058	PLATE SCROLLING BEAM SCALES
0006	F.2.038	SCALE GASKET 1
0007	F.2.039	SCALE GASKET 2
0008	I.1.076	SCREW M4X20 PHILLIPS COUNTERSUNK S/S A2
0009	5.V010	FASTENER ADHESIVE SUPPORT
0010	DADO4AUTOBL	SELF LOCK NUT M4 H5,5 WR7 GALVANIZED
0011	E.4.123	CABLE LOW T. C.A. W/CONN. IP67 FEMALE
0012	E.4.125	CABLE LOW TENSION C.A. W/CONN. IP67 MALE
0013	E.4.124	CABLE LOW TENSION C.A.

la marzocco
handmade in florence

SCALES VERSION – SCALES ASSEMBLY

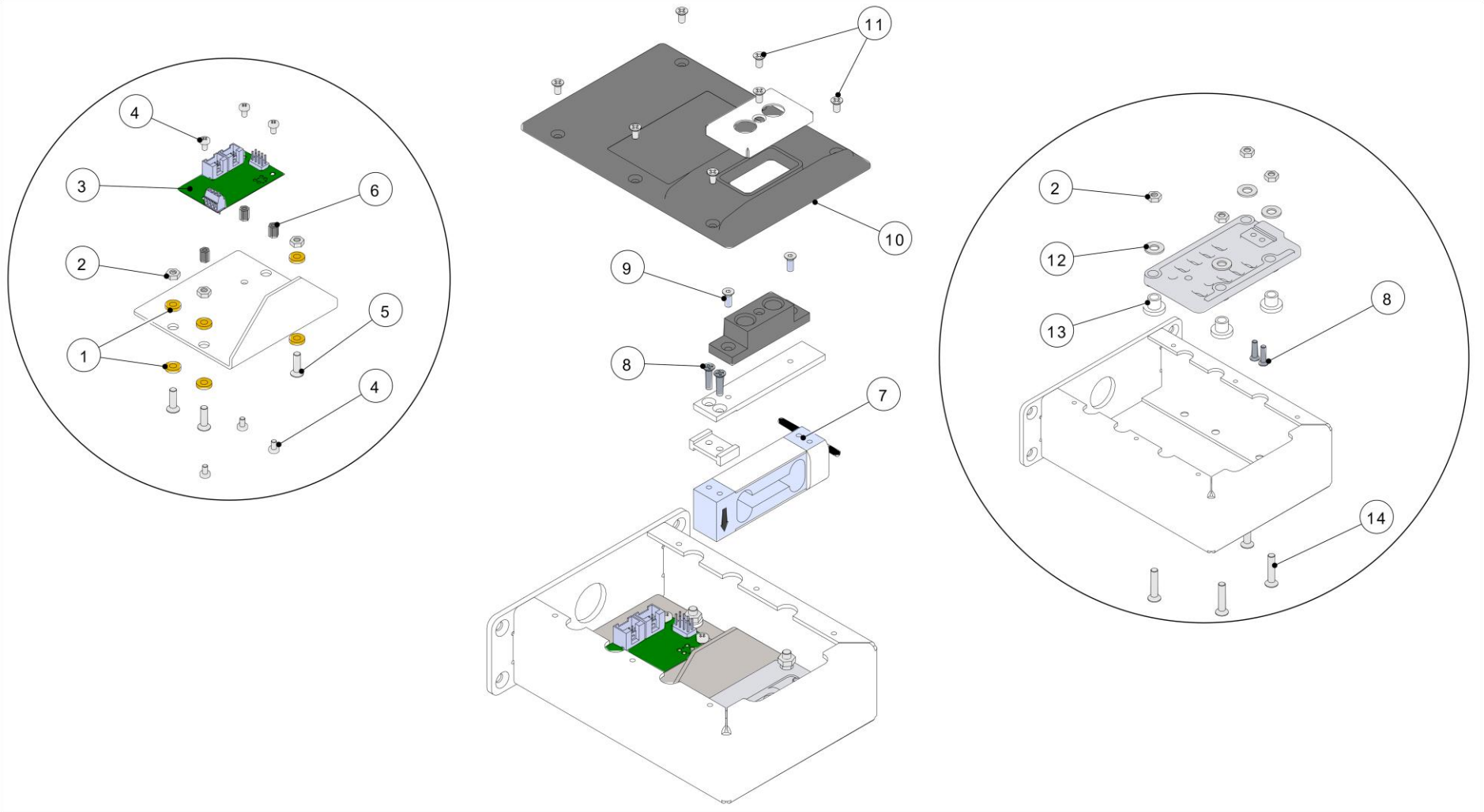

la marzocco
handmade in florence

SCALES VERSION – SCALES ASSEMBLY

Item	Part number	Description
0001	RONDELLA4X9	WASHER 4X9X0,8 BRASS
0002	DADOINOXM4	NUT M4 H3 WR7 S/S A2
0003	E.1.031.02	LOAD CELL ELECTRONIC BOARD
0004	I.1.054	SCREW M3X5 PHILLIPS ROUND PAN S/S A2
0005	I.1.093	SCREW M4X14 PHILLIPS COUNTERSUNK S/S A2
0006	I.6.012	STANDOFF HEX THREADED
0007	E.1.030.R	LOAD CELL KIT
0008	I.1.045	SCREW M3X12 PHILLIPS COUNTERSUNK S/S A2
0009	I.1.004	SCREW M3X8 SOCKET COUNTERSUNK S/S A2
0010	F.1.081	COVER SCALE STRADA
0011	I.1.060	SCREW M3X6 PHILLIPS COUNTERSUNK S/S A2
0012	I.6.013	WASHER M4 PLASTIC
0013	F.1.117	BUSHING FLANGED 4,2X6X7 PTFE
0014	I.1.076	SCREW M4X20 PHILLIPS COUNTERSUNK S/S A2

la marzocco
handmade in florence

ELECTRICAL SYSTEM AND PUMP

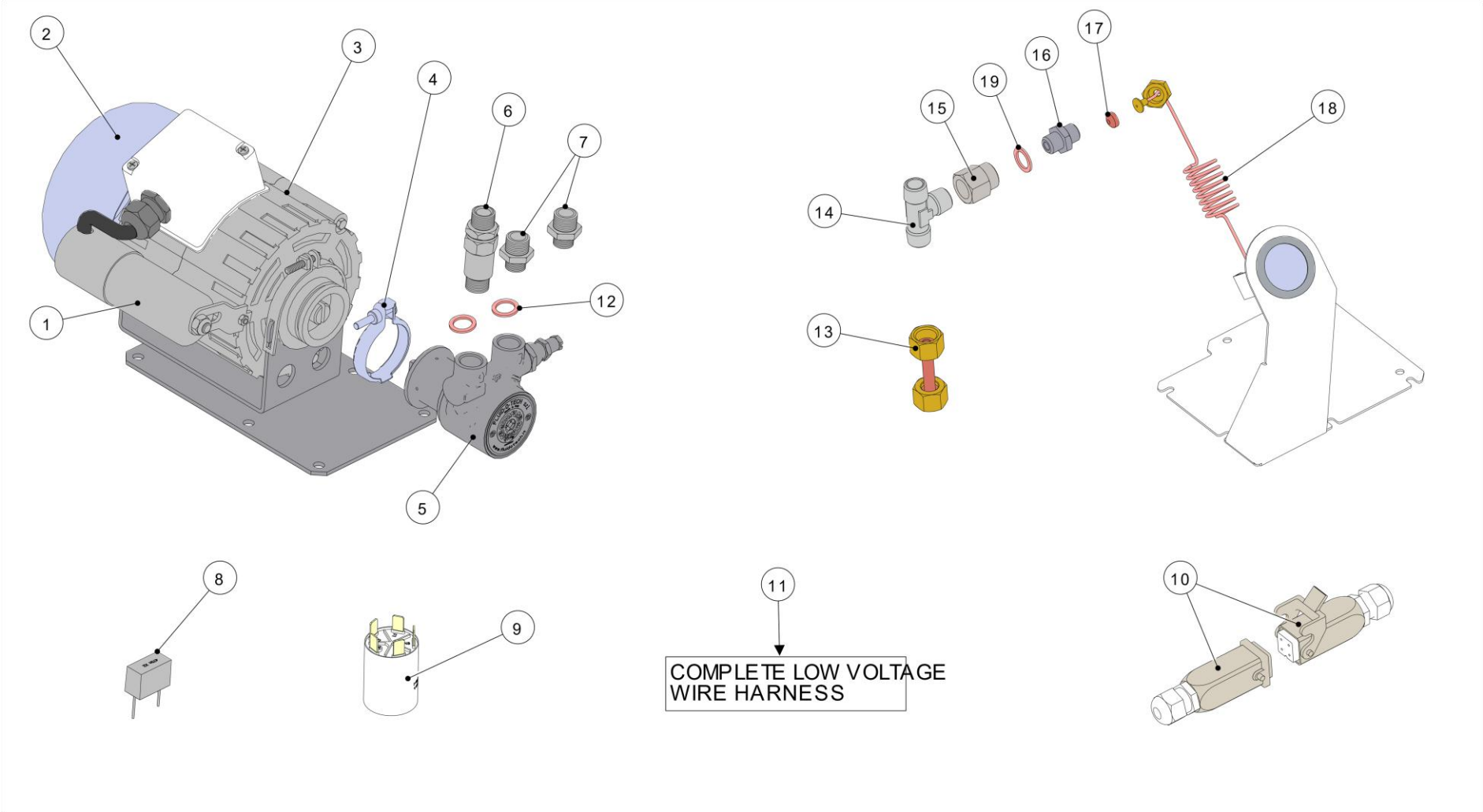

la marzocco
handmade in florence

ELECTRICAL SYSTEM AND PUMP

Item	Part number	Description
0001	L290/CUL	10microF CAPACITOR (L290/8UL MOTOR)
0002	F.6.004	FAN COVER - PUMP MOTOR UL
0003	L290/8UL	UL MOTOR V.220-240 50/60 HZ
0004	L290/C	PUMP CLAMP
0005	L290/2.01	PUMP 200 LT/H
0006	L032/P.01	CHECK VALVE G3/8M TREATED
0007	L305/N.01	NIPPLE G3/8M-G3/8M WR20 H31 BRASS TR.
0007	L306/G.01	NIPPLE G3/8-3/8 COMPRESSION BRASS TR.
0008	L206	FILTER EMC
0009	E.2.092	EMI/RFI FITLER 16A
0010	E.4.044	PUMP CABLE W/RAPID WATERPROOF CONNECTOR
0011	E.4.379.2	WIRING LOW VOLTAGE STRADA X 2GR
0011	E.4.379.3	WIRING LOW VOLTAGE STRADA X 3GR
0012	L180/1	WASHER 22X17X1,5 COPPER
0013	T.1.056	TUBE PUMP DOUBLE CHECK VALVE COREA
0014	A.2.022.01	TEE FITTING R3/8M WR17 BRASS TREATED
0015	A.2.004.01	FITTING G1/4F-G3/8F WR22 BRASS TREATED
0016	L037/3.01	NIPPLE G1/4M-G1/4M WR19 H25.5 BRASS TR.
0017	L137/3	FERRULE 3,5X11X5 T5
0018	E.3.001.02	PRESSURE GAUGE 0-18 BEIGE W/CAPILLARY
0019	L100/1A	WASHER 13,5X19X1,5 COPPER

la marzocco
handmade in florence

PORTAFILTER ASSEMBLY

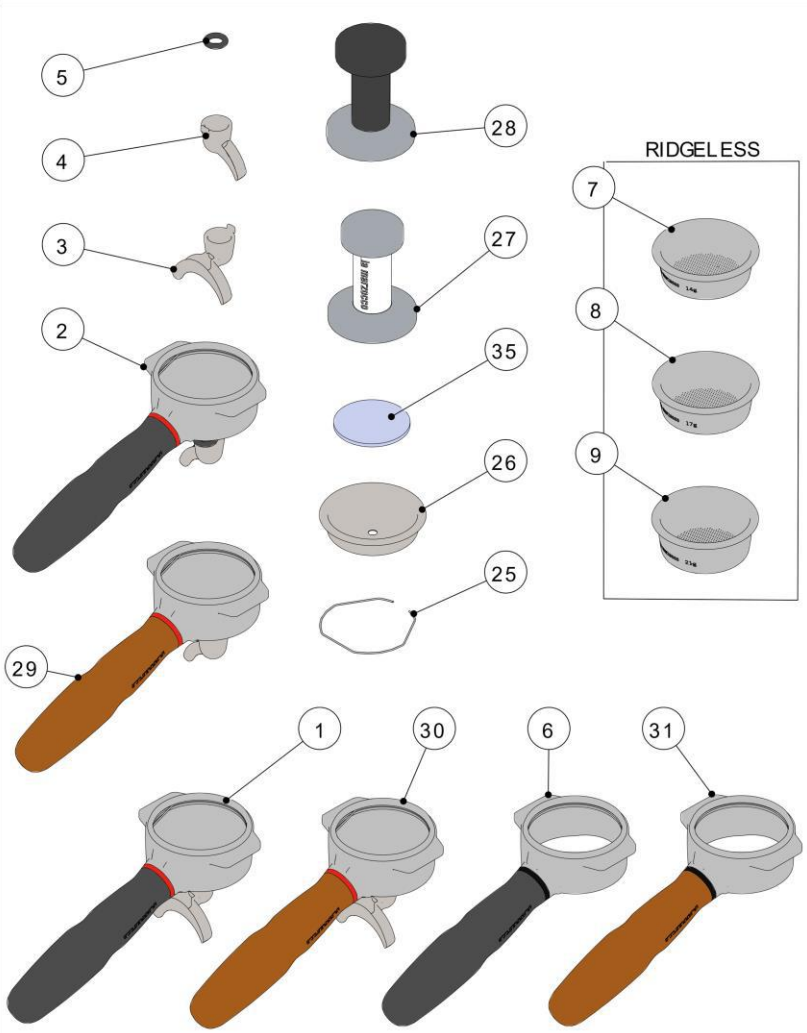

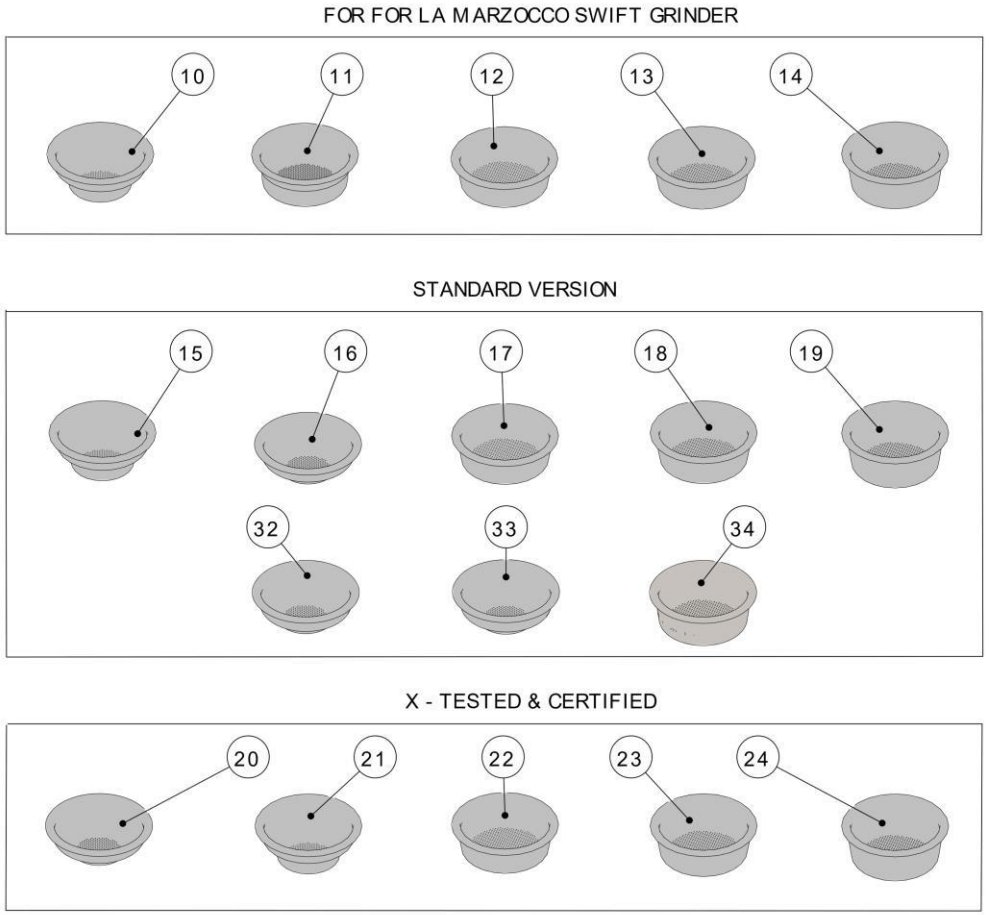

la marzocco
handmade in florence

PORTAFILTER ASSEMBLY

Item	Part number	Description
0001	A.5.114	PORTAFILTER STRAIGHT-IN DOUBLE SPOUT
0002	A.5.113	PORTAFILTER STRAIGHT-IN SINGLE SPOUT
0003	A.5.014.01	DOUBLE SPOUT S/S
0004	A.5.013.01	SINGLE SPOUT S/S
0005	H.1.017	O-RING 3,53X9,12 EPDM 70 SH
0005	H.1.017.02	O-RING 3,37X9,21 EPDM
0006	A.5.124	PORTAFILTER NAKED STRAIGHT-IN
0007	F.3.080	FILTER 14 GR RIDGELESS
0008	F.3.079	FILTER 17 GR RIDGELESS
0009	F.3.081	FILTER 21 GR RIDGELESS
0010	L115/A	FILTER 1 CUP
0011	L115/A/S	SINGLE FILTER
0012	5.128	19mm SWIFT FILTER BASKET
0013	5.127	22mm SWIFT FILTER BASKET
0014	5.133	TRIPLE SWIFT FILTER BASKET
0015	F.3.029.GR	FILTER 7 GR STANDARD
0016	F.3.053	FILTER 7 GR STANDARD ITALY
0017	F.3.028.01	FILTER 14 GR STANDARD
0018	F.3.027.01	FILTER 17 GR STANDARD
0019	F.3.026.01	FILTER 21 GR STANDARD
0020	F.3.054.X	FILTER 7 GR X ITALIA

la marzocco
handmade in florence

PORTAFILTER ASSEMBLY

Item	Part number	Description
0021	F.3.029.X	FILTER 7 GR X
0022	F.3.028.X	FILTER 14 GR X
0023	F.3.027.X	FILTER 17 GR X
0024	F.3.026.X	FILTER 21 GR X
0025	L113	SPRING D WIRE1,1 S/S FILTER LOCK
0026	F.3.131	FILTER FOR BLACKFLUSHING
0027	F.3.045	S/S-ALUMINUM SINGLE-DOUBLE TAMPER
0028	F.3.031.01	ANODIZED DOUBLE TAMPER S/S US VERSION
0029	A.5.139	PORTAFILTER STRAIGHT-IN S. SPOUT MAPLE
0029	A.5.141	PORTAFILTER STRAIGHT-IN S. SPOUT WALNUT
0030	A.5.140	PORTAFILTER STRAIGHT-IN D. SPOUT MAPLE
0030	A.5.142	PORTAFILTER STRAIGHT-IN D. SPOUT WALNUT
0031	A.5.143	PORTAFILTER NAKED STRAIGHT-IN MAPLE
0031	A.5.144	PORTAFILTER NAKED STRAIGHT-IN WALNUT
0032	F.3.150	FILTER 8 GR STANDARD
0033	F.3.134	FILTER 9 GR STANDARD
0034	F.3.135	FILTER 19 GR STANDARD
0035	F.2.058	CAP FILTER FOR BLACKFLUSHING

la marzocco
handmade in florence

PORTAFILTER ASSEMBLY

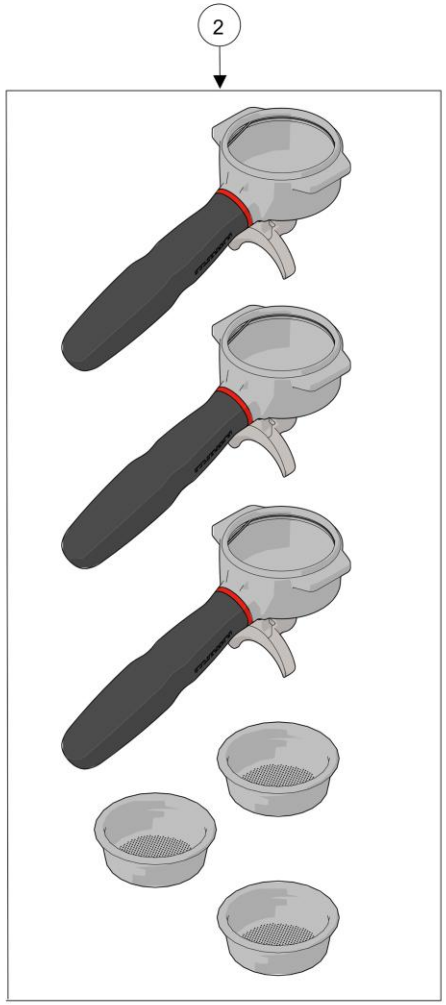

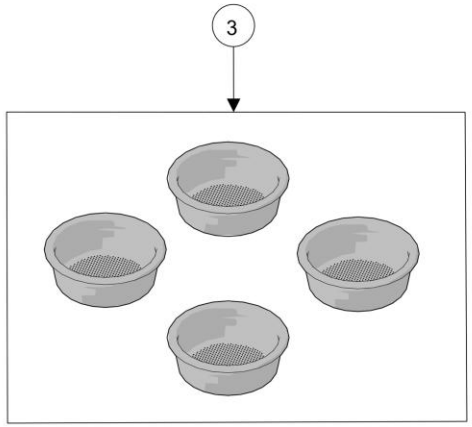

la marzocco
handmade in florence

PORTAFILTER ASSEMBLY

Item	Part number	Description
0001	1200	2 PRECISION STRAIGHT-IN PORTAFILTER KIT
0002	1201	3 PRECISION STRAIGHT-IN PORTAFILTER KIT
0003	932	4x 17g S/S PRECISION FILTER BASKET KIT

la marzocco
handmade in florence

HOSE AND ACCESSORIES

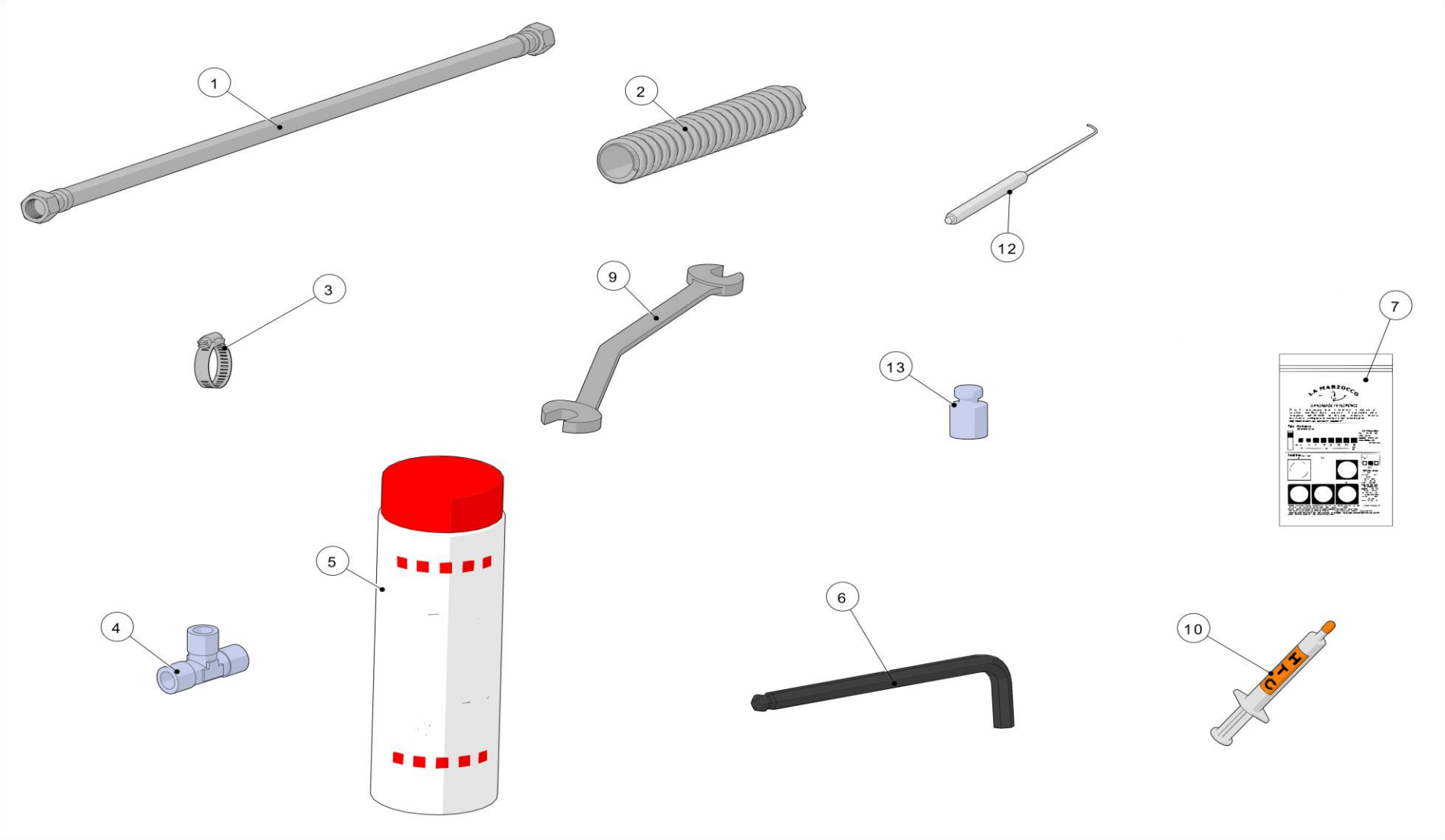

la marzocco
handmade in florence

HOSE AND ACCESSORIES

Item	Part number	Description
0001	L305/050.01	BRAIDED HOSE CM.50 3/8 F
0001	L305/120.01	BRAIDED HOSE CM.120 3/8 F
0001	L305/210.01	BRAIDED HOSE CM.210 3/8F
0001	L306/050	BRAIDED HOSE 3/8 COMPR. WR17 50CM NSF
0001	L306/120	BRAIDED HOSE 3/8 COMPR. WR17 120CM NSF
0001	L306/210	BRAIDED HOSE G3/8F WR20 210CM NSF
0001	L306/210/C	BRAIDED HOSE G3/8F WR20 210CM NSF CURVED
0001	T.5.003	BRAIDED HOSE 3/8 COMPR. WR17 210CM NSF
0002	L308	CLEAR ARMOURED DRAIN HOSE
0003	L312	HOSE CLAMP
0004	A.2.022.01	TEE FITTING R3/8M WR17 BRASS TREATED
0005	V067	LA MARZOCCO PURO CAFF POWDER
0006	UT005	ALLEN KEY 5 WITH BALL END
0007	F.9.000.01	MULTIPLE PARAMETER TEST KIT
0009	UT108	BENT WRENCH WR13 FOR GROUP TUBE
0010	F.1.065	HTC THERMAL COMPOUND SYRINGE 2ML
0012	UT008	GASKET PICK
0013	F.3.050	LOAD 100g TO CALIBRATE SCALES
1000	I.2.009	SPACER M3 M/F 10MM

LA MARZOCCO SRL
Via La Torre, 14/H
Localita' La Torre
50038 Scarperia e San
Piero
(Florence) – ITALY
T. +39 055 849 191
F. +39 055 849 1990
info@lamarzocco.com
www.lamarzocco.com